TECHNICAL CATALOGUE

D SERIES

INVERTER**MOTORS**
drivon®

STANDARD **IEC**

MOTOVARIO®
HEART OF MOTION
a TECO Group company

INDEX

1. SYMBOLS

1.1 SYMBOLS 3

2. INTRODUCTION

2.1 INTRODUCTION 4

2.2 INDUSTRY SECTORS 5

2.3 INVERTER CHARACTERISTICS 6

3. PLUS & BENEFIT

3.1 PLUS & BENEFIT 7

4. DESIGNATION

4.1 DESIGNATION 8

5. DIRECTIVES AND STANDARDS

5.1 DIRECTIVES AND STANDARDS 9

6. OPERATING CHARACTERISTICS

6.1 OPERATING CHARACTERISTICS 10

7. VERSIONS

7.1 VERSIONS 11

7.2 VERSION DV123 12

7.3 VERSION DV340 13

8. TECHNICAL DATA

8.1 RANGE 15

INDEX

8.2 PERFORMANCES **16**

8.2.1 Version DV123 ..... **16**

8.2.2 Version DV340 ..... **18**

8.3 DIMENSIONS **22**

8.3.1 Mounting positions B5 ..... **22**

8.3.2 Mounting positions B14 ..... **23**

8.3.3 Mounting positions B3 ..... **24**

8.4 WEIGHTS **25**

9. ACCESSORIES AND OPTIONS

9.1 ACCESSORIES AND OPTIONS **26**

10. SALES CONDITIONS

10.1 SALES CONDITIONS **29**

1.1 SYMBOLS

P	Power (kW)
V	Voltage (V)
f	Frequency (Hz)
I	Current (A)
M	Torque (Nm)
n	Speed (rpm)
max	Maximum
min	Minimum
nom	Nominal

2.1 INTRODUCTION

Drivon, designed to be used in different types of applications (especially pumps, fans and conveyor belts) consists of extremely reliable components and is controlled by our software that provides excellent performance with special attention to the system energy efficiency. Its Vectorial Control, besides ensuring a constant motor torque throughout a wide range of frequencies without requiring the use of the servo-ventilation at low rpm, provides fast and precise output according to the application dynamic conditions allowing high torque overload of the motor.

Conceived for extremely different and variable supply conditions, Drivon is available both in single-phase/three-phase version (200 ÷260 V / 47 ÷ 63 Hz) with a motor power between 0.25 and 1.5 kW, and in three-phase version (360 ÷ 480 V / 47 ÷ 63 Hz) with a motor power between 0.25 and 5.5 kW. The different functions of this software provide a wide range of standard and optional interfaces for a simple and flexible use. The electronic part, available in 10 power sizes, is located in two different chassis sizes, one for power up to 1.5 kW and the other for power up to 5.5 kW.

The product design considers the following aspects:

- power efficiency;
- modular configuration and expansion possibility;
- potential target markets;
- user-friendly;
- future design development flexibility.

Following these guidelines, Motovario has developed DRIVON, which belongs to the STANDARD segment along with all products of the reference competitors in the AC Induction market.

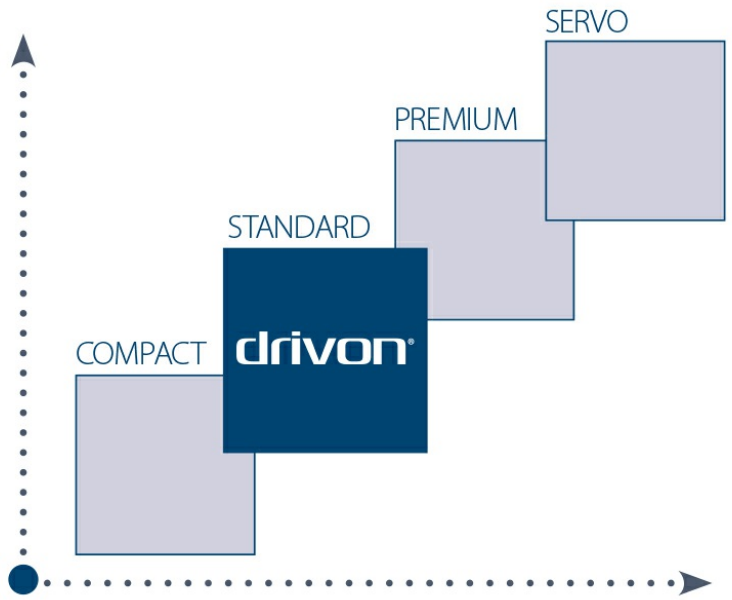

2.2 INDUSTRY SECTORS

The features of DRIVON enable its application in many industry sectors that require specific performance and functions:

- CONVEYOR BELTS
- PALLETISERS
- PUMPS
- FANS
- SCREW CONVEYORS
- MIXERS
- ROTARY TABLES
- PRESSES
- WINDERS/UNWINDERS
- ELEVATORS (NO ZERO-SPEED)

2.3 INVERTER CHARACTERISTICS

- FOC open-loop control of asynchronous motors
- Input for incremental encoder as speed feedback
- Available according to UL/CSA standards
- Possibility to set parameters through field Bus
- Many functions may be assigned to digital inputs, in particular UP/DOWN function
- Possibility to set the reference frequency

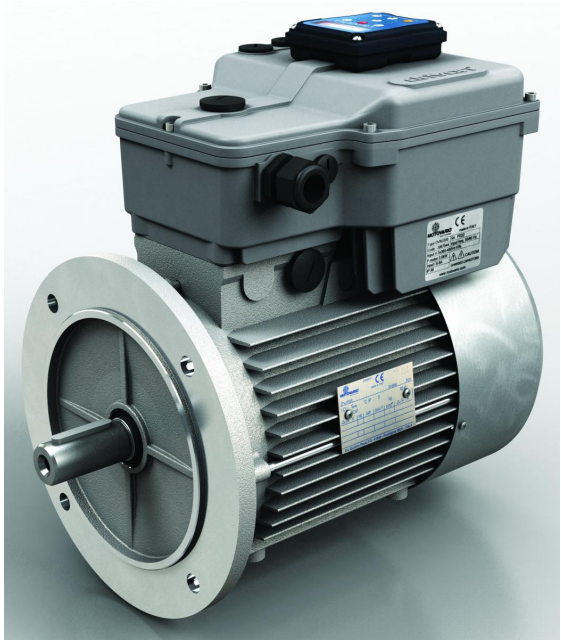

3.1 PLUS & BENEFIT

Motovario Drivon inverter motor is the solution to a series of applications present in many industrial environments. Conveyor belts, pumps, fans and other applications in which the decentralised solution is used for reducing the complexity and the overall dimensions of the switchboard and for reaching the performance and efficiency levels required by the market.

REDUCING THE USE OF FORCED-VENTILATION
The perfect integration between Motovario motors and the management software installed inside the Drivon allows to reduce the use of forced-ventilation in the applications that require low rpm. This is due to the optimisation of the software that integrates the motors' characteristics, but also the use of electric motors with IE2 power efficiency levels.

SMART KEYPAD

Thanks to the optional keypad and the parameter copy function, the use of Drivon is more practical and quick during the product set-up phase. This function enables to apply the same parameters to inverter motors with the same configuration. In addition it is possible to start the inverter motor in two directions and display several details on the keypad.

FIRMWARE UPDATE
The firmware update takes place through USB port, accessible by removing a cover located on the inverter case, and a software on PC.

PC SOFTWARE CONFIGURATION
The program grants access to all the inverter parameters for both reading and writing (on-line modification of the inverter parameters) and the relating save operation in a file on the PC. The configuration software also incorporates a digital oscilloscope for tracking the check values.

SAFE TORQUE OFF BUILT-IN SAFETY
The machine directive defines the safety requirements that each machine must comply with in order to be granted the CE marking and enter the market or be manufactured in the European Union countries. In order to do this, all machine operations must have a certain level of safety and be equipped with systems capable of being activated in the event of an emergency, so as to stop the motor and cut off the power supply, until the correct level of safety and the normal operating conditions are restored. To satisfy this safety need, Motovario has integrated in Drivon a Safe Torque Off system that cuts off the motor in case of an emergency, in compliance with ISO 13849-1.

4.1 DESIGNATION

Inverter Type	Power supply	Rated Speed (RPM)	Motor Inverter Power	Manual Adjustment Control	Accessories / Expansion Modules	Motor Type	Motor size	Motor Version	Brake Type	Brake Power Supply	Brake Control	Other Options
DV	**340**	**G3**	**0220M**	**KP1**	**IOA5**	**TBH**	**100L**	**B5**	**FM**	**/S**	**EMB6**	**UL**
DV	123	G1	0025S	ISI	NO	TS	71A	B5	FM	/S	EMB5	IC416
	340	G2	0037S	KP1	IOA5	TH	...	B14	MS		EMB6	UL
		G3	0043S	KP2	IOB5	TBS	132MB	B3			BC	
		G4	0055S	KP3	PDP5	TBH		B35				
			0064S	KP4	ETC5			B34				
			0075S	PS5	IOA6							
			0095S	PS6	IOB6							
			0110S		PDP6							
			0130S		ETC6							
			0150S									
			0190M									
			0220M									
			0260M									
			0300M									
			0380M									
			0400M									
			0520M									
			0550M									

1/3PH 230V 123
3PH 400V 340

950 rpm G1
1450 rpm G2
1650 rpm G3
2450 rpm G4

EMB5 Electro Mechanical Braking Module in position 5
EMB6 Electro Mechanical Braking Module in position 6
BC Braking Chopper Module
(sole position on the cover)

NO No Expansion Module
IOA5 I/O Module Type A in position 5
IOB5 I/O Module Type B in position 5
PDP5 Profibus DP Module in position 5
ETC5 Profibus Ethercat in position 5
IOA6 I/O Module Type A in position 6
IOB6 I/O Module Type B in position 6
PDP6 Profibus DP Module in position 6
ETC6 Profibus Ethercat in position 6

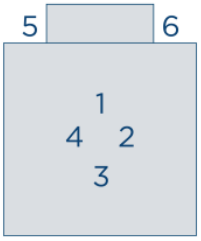

025S 0.25kW inverter Small size
037S 0.37kW inverter Small size
....
190M 1.90kW inverter Medium size
220M 2.2kW inverter Medium size
....

ISI Integrated Standard Interface
KP1 Keypad Pos.1
KP2 Keypad Pos.2
KP3 Keypad Pos.3
KP4 Keypad Pos.4
PS5 PotiSwitch Pos.5
PS6 PotiSwitch Pos.6

5.1 DIRECTIVES AND STANDARDS

EN 61800-1:1998-02	Adjustable speed electrical power drive systems Part 1: General requirements and rating specifications for variable-speed low-voltage drives with d.c. motors
EN 61800-2:1998-04	Adjustable speed electrical power drive systems Part 2: General requirements and rating specifications for low-voltage drives with a.c. motors
EN 61800-3:2004-12	Adjustable speed electrical power drive systems Part 3: EMC requirements and specific test methods
EN 61800-5-1:2007-09	Adjustable speed electrical power drive systems Part 5-1: Safety requirements - Electrical, thermal and energy safety
EN 61800-5-2:2007-10	Adjustable speed electrical power drive systems Part 5-2: Safety requirements - Functional safety
EN 61800-7-1:2008-04	Adjustable speed electrical power drive systems Part 7-1: Generic interface and use of profiles for power drive systems - Interface definition
2014/35/UE	Low voltage directive
2014/30/UE	EMC directive (Electromagnetic compatibility)

AVAILABLE CERTIFICATIONS

UL (508c) „UL Standard for Safety for Power conversion equipment”
cUL (CSA C22.2 Nr. 14) „Industrial Control Equipment”
CE

6.1 OPERATING CHARACTERISTICS

Drivon is an inverter motor with sensorless field orientation speed control that also integrates a V/f control. Drivon is optimised for working at best with the Motovario motors, since the parameters of the motors are integrated in the inverter management software.
Drivon is capable of managing the speed variation, taking advantage of various sources that interact with the inverter motor by means of the built-in or optional I/O. Drivon can receive digital signals that, if properly programmed, can perform various functions, but it can also be controlled thanks to the integrated field bus (Modbus or CANopen) or by means of the optional ones.

Speed variation mode:

- Built-in potentiometer
- Keypad up/down buttons
- Up/down inputs from digital inputs (potentiometer motor)
- Fixed frequency selected from digital input binary combination
- Analogue input (programmable +/-10V or 0-20mA)
- Built-in potentiometer + analogue input algebraic addition
- 0-300KHz frequency input (on optional board)
- Modbus RTU register
- CANopen DSP402

With the programmable digital inputs it is possible to assign different functions to them, among which:

- start/stop
- motion inversion (relative direction control)
- clockwise start (absolute direction control)
- counter-clockwise start (absolute direction control)
- potentiometer motor
- fixed frequency binary combination
- quick emergency stop enable, according to a ramp that may be parametrised
- emergency stop enable at maximum current
- alarm

Drivon can also use the encoder for speed loop feedback through a special connector.

The optional keypad with integrated display provides several details, for example:

- Motor speed (rpm)
- Torque delivered (%)
- Torque current (A)
- Magnetic current (A)
- Reference frequency (Hz)
- Output frequency (Hz)

It is also possible to introduce a scale factor between the measure chosen from the previous list and the one actually displayed on the keypad.

FIELD BUS
Drivon is designed to be used in those applications that need to communicate with the automation world and this is why Motovario designed it with the possibility of relying on the Modbus RTU and CANopen DSP 402 communication protocols. These two field buses are integrated in the software and have special connections.

7.1 VERSIONS

The DRIVON model is available in two different versions, which are distinguished by

- Power supply type
- Power range
- Rated operating speeds

Version	Power supply	Power range	Rated operating speeds
DV123	1ph 230V	0.25 – 1.5 kW	950 rpm
			1450 rpm
DV340	3ph 400V	0.25 – 5.5 kW	950 rpm
			1450 rpm
			1650 rpm
			2450 rpm

The term rated operating speed can be understood as the minimum speed at which the motor-inverter delivers its nominal power with continuity, or rather the maximum speed at which it is able to guarantee its nominal torque with continuity.

7.2 VERSION DV123

In this version, the rated operating speeds G1 and G2 are only available at the power ratings of 0.25 - 1.5 kW.

RATED OPERATING SPEED G1:

Drivon	Supply voltage (ph x V)	Supply current at 230V (A)	Rated output (kW)	Rated operating speed (rpm)	Inverter size	Motor size
DV123-G1-0025S-TS71	1 x 180...260	1.1	0.25	950	S	71
DV123-G1-0037S-TS80	1 x 180...260	1.8	0.37	950	S	80
DV123-G1-0055S-TS80	1 x 180...260	2.5	0.55	950	S	80
DV123-G1-0075S-TH90	1 x 180...260	3	0.75	950	S	90
DV123-G1-0110S-TH100	1 x 180...260	3,9	1.1	950	S	100
DV123-G1-0150S-TH100	1 x 180...260	5,2	1.5	950	S	100

RATED OPERATING SPEED G2:

Drivon	Supply voltage (ph x V)	Supply current at 230V (A)	Rated output (kW)	Rated operating speed (rpm)	Inverter size	Motor size
DV123-G2-0025S-TS71	1 x 180...260	1,1	0.25	1450	S	71
DV123-G2-0037S-TS71	1 x 180...260	1,5	0.37	1450	S	71
DV123-G2-0055S-TS80	1 x 180...260	2	0.55	1450	S	80
DV123-G2-0075S-TH80	1 x 180...260	2,5	0.75	1450	S	80
DV123-G2-0110S-TH90	1 x 180...260	3,5	1.1	1450	S	90
DV123-G2-0150S-TH90	1 x 180...260	4,8	1.5	1450	S	90

7.3 VERSION DV340

This version is available with the rated operating speeds G1, G2, G3 and G4:

RATED OPERATING SPEED G1:

Drivon	Supply voltage (ph x V)	Supply current at 400V (A)	Rated output (kW)	Rated operating speed (rpm)	Inverter size	Motor size
DV340-G1-0025S-TS71	3 x 320...520	0,7	0.25	950	S	71
DV340-G1-0037S-TS80	3 x 320...520	1,2	0.37	950	S	80
DV340-G1-0055S-TS80	3 x 320...520	1,6	0.55	950	S	80
DV340-G1-0075S-TH90S	3 x 320...520	2	0.75	950	S	90
DV340-G1-0110S-TH100	3 x 320...520	2,5	1.1	950	S	100
DV340-G1-0150S-TH100	3 x 320...520	3,4	1.5	950	S	100
DV340-G1-0220M-TH112	3 x 320...520	4,7	2.2	950	M	112
DV340-G1-0300M-TH132	3 x 320...520	6	3.0	950	M	132
DV340-G1-0400M-TH132	3 x 320...520	8	4.0	950	M	132
DV340-G1-0550M-TH132	3 x 320...520	11	5.5	950	M	132

RATED OPERATING SPEED G2:

Drivon	Supply voltage (ph x V)	Supply current at 400V (A)	Rated output (kW)	Rated operating speed (rpm)	Inverter size	Motor size
DV340-G2-0025S-TS71	3 x 320...520	0,7	0.25	1450	S	71
DV340-G2-0037S-TS71	3 x 320...520	1	0.37	1450	S	71
DV340-G2-0055S-TS80	3 x 320...520	1,3	0.55	1450	S	80
DV340-G2-0075S-TH80	3 x 320...520	1,6	0.75	1450	S	80
DV340-G2-0110S-TH90S	3 x 320...520	2,3	1.1	1450	S	90
DV340-G2-0150S-TH90L	3 x 320...520	3,2	1.5	1450	S	90
DV340-G2-0220M-TH100	3 x 320...520	4,5	2.2	1450	M	100
DV340-G2-0300M-TH100	3 x 320...520	6,1	3.0	1450	M	100
DV340-G2-0400M-TH112	3 x 320...520	7,7	4.0	1450	M	112
DV340-G2-0550M-TH132	3 x 320...520	10	5.5	1450	M	132

7.3 VERSION DV340

RATED OPERATING SPEED G3:

Drivon	Supply voltage (ph x V)	Supply current at 400V (A)	Rated output (kW)	Rated operating speed (rpm)	Inverter size	Motor size
DV340-G3-0043S-TS71	3 x 320...520	1,3	0.43	1650	S	71
DV340-G3-0064S-TS80	3 x 320...520	2	0.64	1650	S	80
DV340-G3-0095S-TS80	3 x 320...520	2,8	0.95	1650	S	80
DV340-G3-0130S-TH90S	3 x 320...520	3,4	1.3	1650	S	90
DV340-G3-0190S-TH100	3 x 320...520	4,4	1.9	1650	M	100
DV340-G3-0260S-TH100	3 x 320...520	5,9	2.6	1650	M	100
DV340-G3-0380M-TH112	3 x 320...520	8,1	3.8	1650	M	112
DV340-G3-0520M-TH132	3 x 320...520	10,4	5.2	1650	M	132

RATED OPERATING SPEED G4:

Drivon	Supply voltage (ph x V)	Supply current at 400V (A)	Rated output (kW)	Rated operating speed (rpm)	Inverter size	Motor size
DV340-G4-0043S-TS71	3 x 320...520	1,2	0.43	2450	S	71
DV340-G4-0064S-TS71	3 x 320...520	1,7	0.64	2450	S	71
DV340-G4-0095S-TS80	3 x 320...520	2,3	0.95	2450	S	80
DV340-G4-0130S-TH80	3 x 320...520	2,8	1.3	2450	S	80
DV340-G4-0190M-TH90S	3 x 320...520	3,9	1.9	2450	M	90
DV340-G4-0260M-TH90L	3 x 320...520	5,4	2.6	2450	M	90
DV340-G4-0380M-TH100	3 x 320...520	7,8	3.8	2450	M	100
DV340-G4-0520M-TH100	3 x 320...520	10,6	5.2	2450	M	100

8.1 RANGE

Power supply	1ph230V	3ph400V
Power range	0.25 – 1.5 kW	0.25 – 5.5 kW
Motor sizes	71-80-90	71-80-90-100-112-132
Inverter sizes	S	S-M
Constant torque speed ranges	50÷950 50÷1450	50÷950 50÷1450 50÷1650 50÷2450
Speed range	0 ÷ 3000 rpm	
Frequency range	0 ÷ 150 Hz	
Frequency resolution	0.01 Hz	
Motor control	Sensorless vectorial, V/f scalar	
Motor starting torque	200% of the rated torque	
100% torque step response	150ms	
Current overload	150% / 60s ; 200% / 3s	
Frequency reference	Integrated potentiometer, analogue input, binary fixed frequency, pulse train, fieldbus, digital Up/Down, keyboard, IP66 potentiometer, multi source (sum)	
Direction selection	Digital inputs, keyboard, fieldbus, IP66 switch (optional)	
Analogue inputs	1 x (-10÷10V) / (0-20mA)	
Digital inputs	4 multifunction (+1 optional)	
Thermal probe inputs	1 x bimetallic (+1 x PTC/PT100 optional)	
Built-in potentiometer	1 with Start/Stop function (+1 optional IP66)	
Encoder input	1 incremental Line Driver (speed loop)	
Analogue outputs	1 x (0-10V) multifunction (optional)	
Digital Outputs	1 multifunction (optional)	
Relay outputs	1 multifunction (+1 optional)	
Serial interfaces	USB	
Integrated field BUS	CANopen 402, Modbus RTU	
Optional field buses	Profibus DPV1, Ethercat, Ethernet-IP, Profinet	
Optional expansion modules	I/O expansion; EM brake control; Dynamic braking chopper; External IP66 Potentiometer and Direction Selector	
Integrated safety	Safe Torque Off, short circuit, temperature	
On-board power supplies	1x10V, 1x24VDC	
Other Functions	• Parametric V/f curve (V/f control mode) • Parametric S ramps • PI process controller • Jog function • Electronic torque limiter • DC-bus accessible • Integrated multiple dynamic braking • Parameter Copy Keyboard • I/O Expansions (optional) • Braking chopper and resistor (optional) • Synchronised electromechanical brake control (optional) • Configuration software via PC with integrated digital oscilloscope	
Other options	Emergency stop button, quick Power and Signal connectors	
Protection rating	IP55-56-66	

8.2 PERFORMANCES

8.2.1 Version DV123

Rated operating speed G1

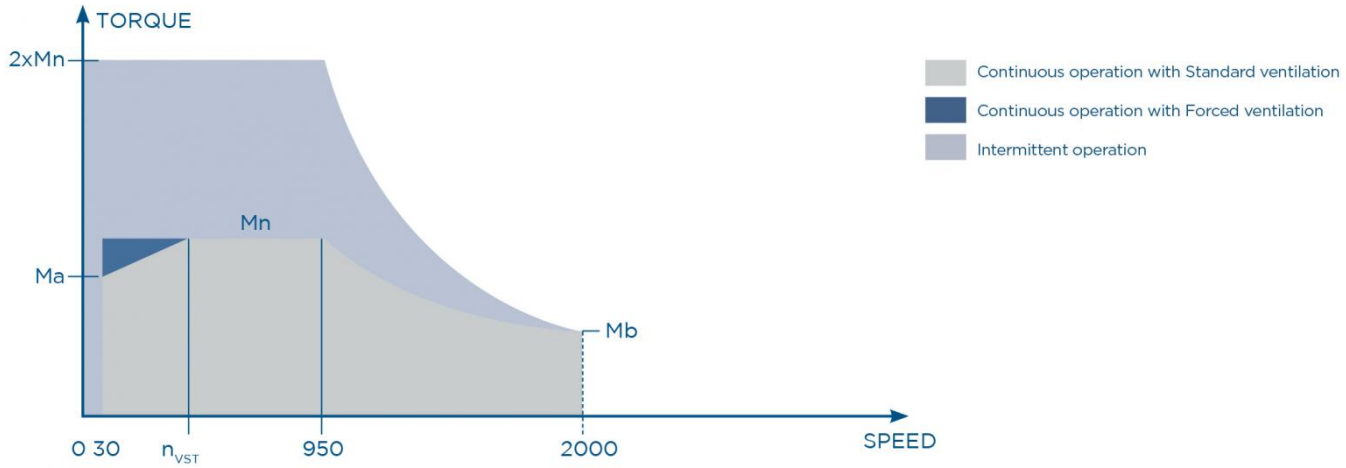

Pn = motor shaft nominal power
Mn = continuous nominal torque
Ma = continuous torque at minimum speed
Mb = continuous torque at maximum speed
nn = rated speed
nmin = minimum speed
nmax = maximum speed
nVST = forced ventilation speed threshold
IC411 = STANDARD ventilation
IC416 = FORCED ventilation
(1) With a 230V supply voltage
(2) At an ambient temperature of 25 °C and a carrier frequency of 8 kH

Drivon					Pn (kW)	n_n (rpm)	Mn (Nm) (1)	n_{max} (rpm)	Mb (Nm) (1)	n_{min} (rpm)	Ma (Nm) (1)		n_{VST} (rpm) (2)
											IC411	IC416	
DV	123	G1	0025S	TS71	0,25	950	2,5	2000	1,2	30	1,1	2,5	180
DV	123	G1	0037S	TS80	0,37	950	3,7	2000	1,8	30	1,6	3,7	180
DV	123	G1	0055S	TS80	0,55	950	5,5	2000	2,6	30	2,4	5,5	180
DV	123	G1	0075S	TH90S	0,75	950	7,5	2000	3,6	30	3,3	7,5	200
DV	123	G1	0110S	TH90L	1,1	950	11,1	2000	5,3	30	4,9	11,1	200
DV	123	G1	0150S	TH100L	1,5	950	15,1	2000	7,2	30	6,6	15,1	300

8.2 PERFORMANCES

Rated operating speed G2

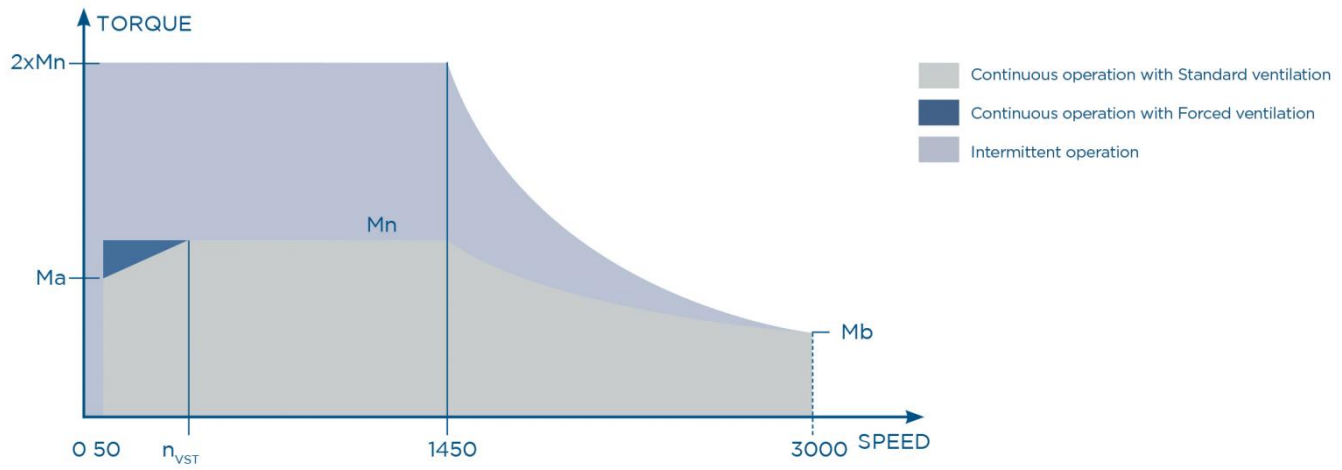

Pn = motor shaft nominal power
Mn = continuous nominal torque
Ma = continuous torque at minimum speed
Mb = continuous torque at maximum speed
nn = rated speed
nmin = minimum speed
nmax = maximum speed
nVST = forced ventilation speed threshold
IC411 = STANDARD ventilation
IC416 = FORCED ventilation
(1) With a 230V supply voltage
(2) At an ambient temperature of 25 °C and a carrier frequency of 8 kH

Drivon					Pn (kW)	n_n (rpm)	Mn (Nm) (1)	n_{max} (rpm)	Mb (Nm) (1)	n_{min} (rpm)	Ma (Nm) (1)		n_{VST} (rpm) (2)
											IC411	IC416	
DV	123	G2	0025S	TS71	0,25	1450	1,6	3000	0,7	50	0,7	1,6	250
DV	123	G2	0037S	TS71	0,37	1450	2,4	3000	1,1	50	1,1	2,4	250
DV	123	G2	0055S	TS80	0,55	1450	3,6	3000	1,6	50	1,6	3,6	250
DV	123	G2	0075S	TH80	0,75	1450	4,9	3000	2,1	50	2,2	4,9	250
DV	123	G2	0110S	TH90S	1,1	1450	7,2	3000	3,1	50	3,2	7,2	250
DV	123	G2	0150S	TH90L	1,5	1450	9,9	3000	4,3	50	4,4	9,9	400

8.2 PERFORMANCES

8.2.2 Version DV340

Rated operating speed G1

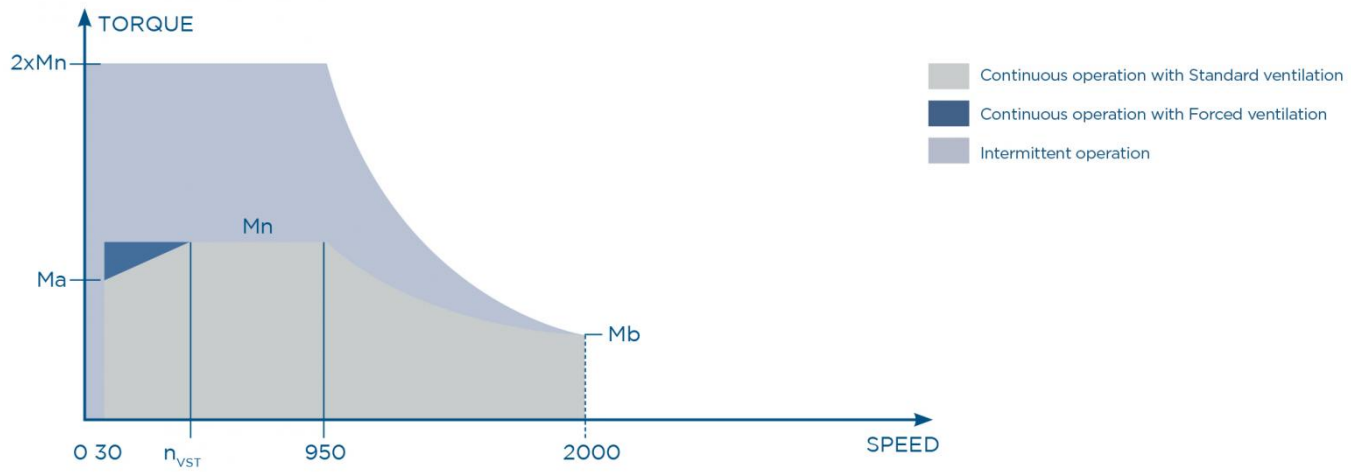

Pn = motor shaft nominal power
Mn = continuous nominal torque
Ma = continuous torque at minimum speed
Mb = continuous torque at maximum speed
nn = rated speed
nmin = minimum speed
nmax = maximum speed
nVST = forced ventilation speed threshold
IC411 = STANDARD ventilation
IC416 = FORCED ventilation
(1) With a 400V supply voltage
(2) At an ambient temperature of 25 °C and a carrier frequency of 8 kHz

Drivon					Pn (kW)	n_n (rpm)	Mn (Nm) (1)	n_{max} (rpm)	Mb (Nm) (1)	n_{min} (rpm)	Ma (Nm) (1)		n_{VST} (rpm) (2)
											IC411	IC416	
DV	340	G1	0025S	TS71	0,25	950	2,5	2000	1,2	30	1,1	2,5	180
DV	340	G1	0037S	TS80	0,37	950	3,7	2000	1,8	30	1,6	3,7	180
DV	340	G1	0055S	TS80	0,55	950	5,5	2000	2,6	30	2,4	5,5	180
DV	340	G1	0075S	TH90S	0,75	950	7,5	2000	3,6	30	3,3	7,5	200
DV	340	G1	0110S	TH90L	1,1	950	11,1	2000	5,3	30	4,9	11,1	200
DV	340	G1	0150S	TH100L	1,5	950	15,1	2000	7,2	30	6,6	15,1	300
DV	340	G1	0220M	TH112	2,2	950	22,1	2000	10,5	30	9,7	22,1	350
DV	340	G1	0300M	TH132	3	950	30,2	2000	14,3	30	13,3	30,2	350
DV	340	G1	0400M	TH132	4	950	40,2	2000	19,1	30	17,8	40,2	350
DV	340	G1	0550M	TH132	5,5	950	55,5	2000	26,3	30	24,4	55,5	400

8.2 PERFORMANCES

Rated operating speed G2

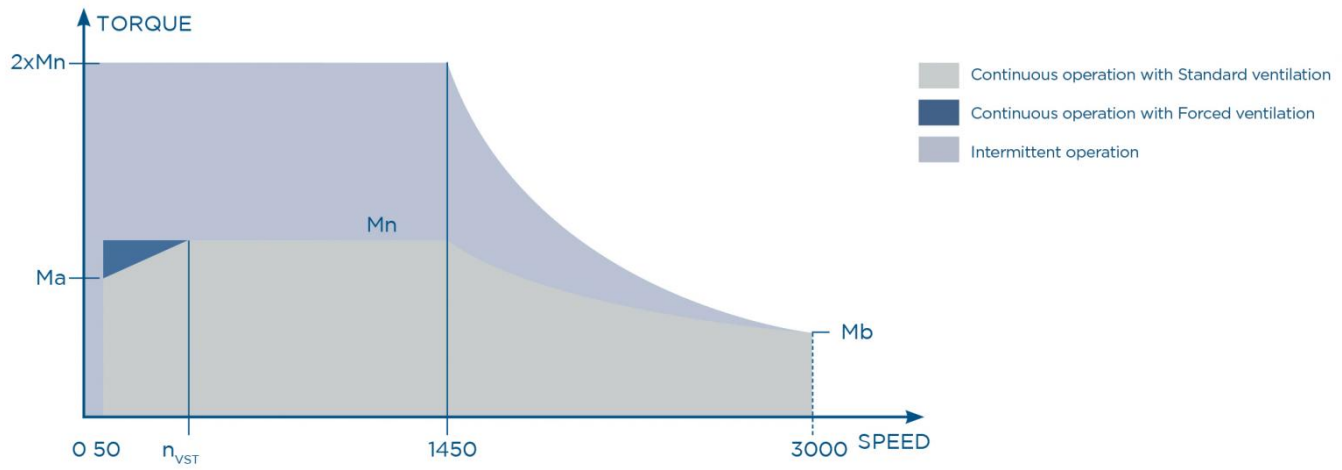

Pn = motor shaft nominal power
Mn = continuous nominal torque
Ma = continuous torque at minimum speed
Mb = continuous torque at maximum speed
nn = rated speed
nmin = minimum speed
nmax = maximum speed
nVST = forced ventilation speed threshold
IC411 = STANDARD ventilation
IC416 = FORCED ventilation
(1) With a 400V supply voltage
(2) At an ambient temperature of 25 °C and a carrier frequency of 8 kHz

Drivon					Pn (kW)	n_n (rpm)	Mn (Nm) (1)	n_{max} (rpm)	Mb (Nm) (1)	n_{min} (rpm)	Ma (Nm) (1)		n_{VST} (rpm) (2)
											IC411	IC416	
DV	340	G2	0025S	TS71	0,25	1450	1,6	3000	0,7	50	0,7	1,6	250
DV	340	G2	0037S	TS71	0,37	1450	2,4	3000	1,1	50	1,1	2,4	250
DV	340	G2	0055S	TS80	0,55	1450	3,6	3000	1,6	50	1,6	3,6	250
DV	340	G2	0075S	TH80	0,75	1450	4,9	3000	2,1	50	2,2	4,9	250
DV	340	G2	0110S	TH90S	1,1	1450	7,2	3000	3,1	50	3,2	7,2	250
DV	340	G2	0150S	TH90L	1,5	1450	9,9	3000	4,3	50	4,4	9,9	400
DV	340	G2	0220M	TH100	2,2	1450	14,5	3000	6,3	50	6,5	14,5	500
DV	340	G2	0300M	TH100	3	1450	19,8	3000	8,6	50	8,9	19,8	500
DV	340	G2	0400M	TH112	4	1450	26,4	3000	11,4	50	11,8	26,4	500
DV	340	G2	0550M	TH132	5,5	1450	36,2	3000	15,7	50	16,2	36,2	600

8.2 PERFORMANCES

Rated operating speed G3

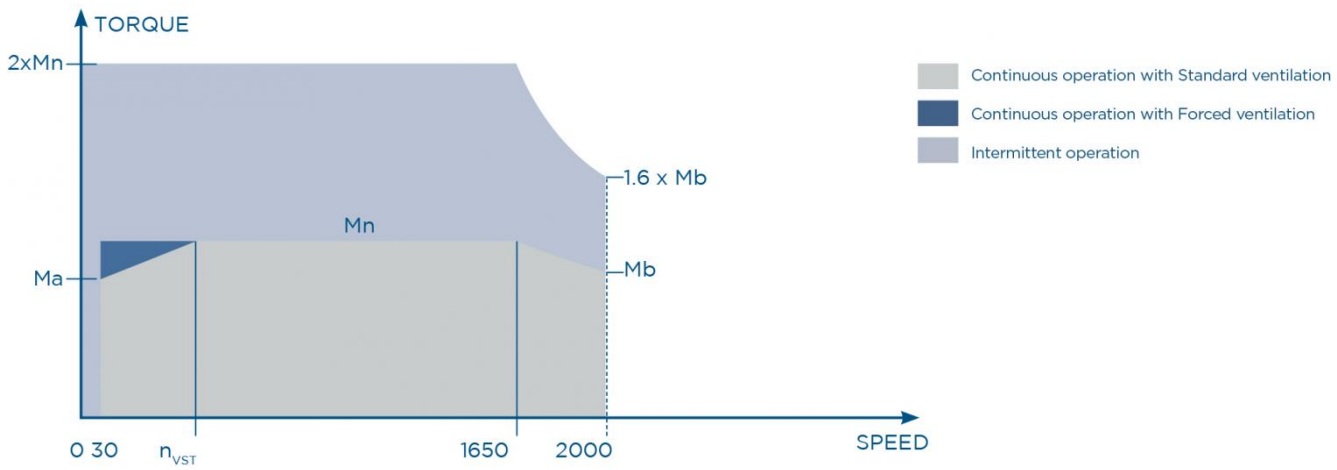

Pn = motor shaft nominal power
Mn = continuous nominal torque
Ma = continuous torque at minimum speed
Mb = continuous torque at maximum speed
nn = rated speed
nmin = minimum speed
nmax = maximum speed
nVST = forced ventilation speed threshold
IC411 = STANDARD ventilation
IC416 = FORCED ventilation
(1) With a 400V supply voltage
(2) At an ambient temperature of 25 °C and a carrier frequency of 8 kH

Drivon					Pn (kW)	n_n (rpm)	Mn (Nm) (1)	n_{max} (rpm)	Mb (Nm) (1)	n_{min} (rpm)	Ma (Nm) (1)		n_{VST} (rpm) (2)
											IC411	IC416	
DV	340	G3	0043S	TS71	0,43	1650	2,5	2000	1,2	30	1,1	2,5	180
DV	340	G3	0064S	TS80	0,64	1650	3,7	2000	1,8	30	1,6	3,7	180
DV	340	G3	0095S	TS80	0,95	1650	5,5	2000	2,6	30	2,4	5,5	180
DV	340	G3	0130S	TH90S	1,3	1650	7,5	2000	3,6	30	3,3	7,5	200
DV	340	G3	0190M	TH90L	1,9	1650	11,1	2000	5,3	30	4,9	11,1	200
DV	340	G3	0260M	TH100L	2,6	1650	15,1	2000	7,2	30	6,6	15,1	300
DV	340	G3	0380M	TH112	3,8	1650	22,1	2000	10,5	30	9,7	22,1	350
DV	340	G3	0520M	TH132	5,2	1650	30,2	2000	14,3	30	13,3	30,2	350

8.2 PERFORMANCES

Rated operating speed G4

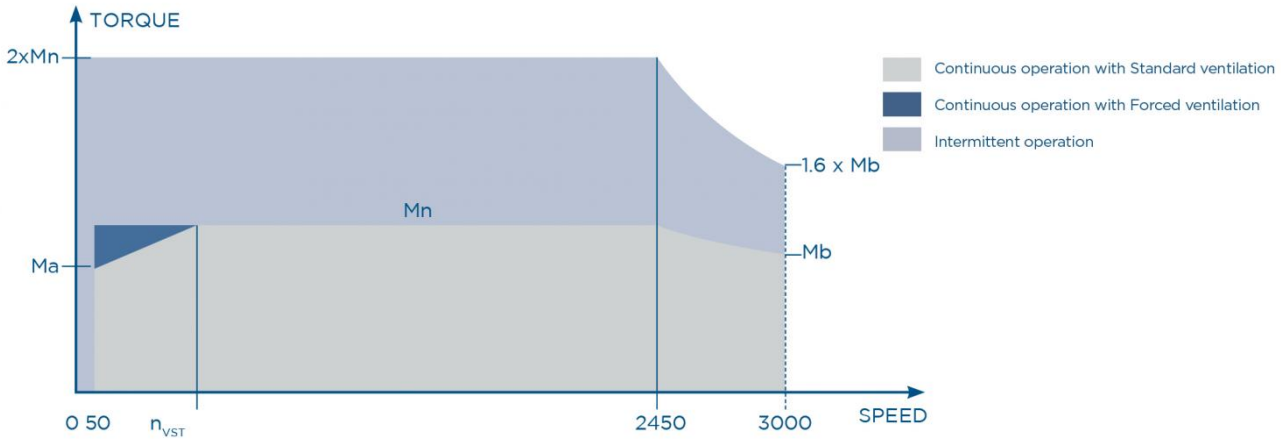

Pn = motor shaft nominal power
Mn = continuous nominal torque
Ma = continuous torque at minimum speed
Mb = continuous torque at maximum speed
nn = rated speed
nmin = minimum speed
nmax = maximum speed
nVST = forced ventilation speed threshold
IC411 = STANDARD ventilation
IC416 = FORCED ventilation
(1) With a 400V supply voltage
(2) At an ambient temperature of 25 °C and a carrier frequency of 8 kH

Drivon					Pn (kW)	n_n (rpm)	Mn (Nm) (1)	n_{max} (rpm)	Mb (Nm) (1)	n_{min} (rpm)	Ma (Nm) (1)		n_{VST} (rpm) (2)
											IC411	IC416	
DV	340	G4	0043S	TS71	0,43	2450	1,6	3000	0,7	50	0,7	1,6	250
DV	340	G4	0064S	TS71	0,64	2450	2,4	3000	1,1	50	1,1	2,4	250
DV	340	G4	0095S	TS80	0,95	2450	3,6	3000	1,7	50	1,6	3,6	250
DV	340	G4	0130S	TH80	1,3	2450	4,9	3000	2,3	50	2,2	4,9	250
DV	340	G4	0190M	TH90S	1,9	2450	7,2	3000	3,4	50	3,2	7,2	250
DV	340	G4	0260M	TH90L	2,6	2450	9,9	3000	4,7	50	4,4	9,9	400
DV	340	G4	0380M	TH100	3,8	2450	14,5	3000	7	50	6,5	14,5	500
DV	340	G4	0520M	TH100	5,2	2450	19,8	3000	9,6	50	8,9	19,8	500

8.3 DIMENSIONS

8.3.1 Mounting positions B5

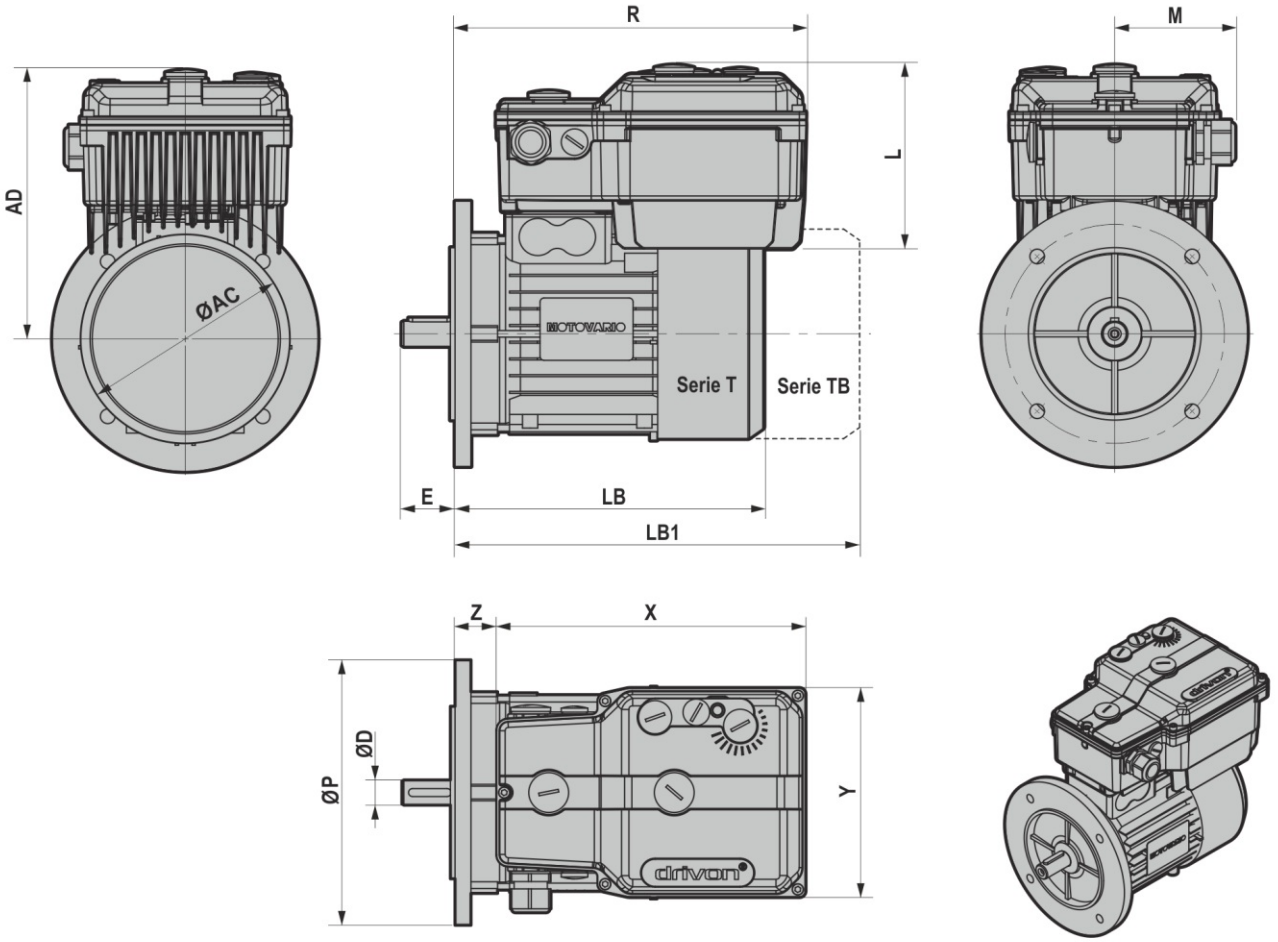

Inverter	Mot.	X	Y	L	M	Z	R	AC	P	D	E	LB	LB1	AD
S	71	233	158	139	91	27	260	139	160	14 j6	30	209	276	200
S	80	233	158	139	91	31	264	158	200	19 j6	40	233	304	209
S	90S	233	158	139	91	42	275	173	200	24 j6	50	248	325	221
S	90L	233	158	139	91	42	275	173	200	24 j6	50	273	350	221
S	100	233	158	139	91	50	283	191	250	28 j6	60	308	390	232
M	90S	258	193	152	102	33	291	173	200	24 j6	50	248	304	215
M	90L	258	193	152	102	33	291	173	200	24 j6	50	273	350	215
M	100	258	193	152	102	41	299	191	250	28 j6	60	308	390	224
M	112	258	193	152	102	44	302	211	250	28 j6	60	323	419	238
M	132S	258	193	152	102	58	316	249	300	38 k6	80	372	462	276
M	132M	258	193	152	102	58	316	249	300	38 k6	80	410	514	276

8.3 DIMENSIONS

8.3.2 Mounting positions B14

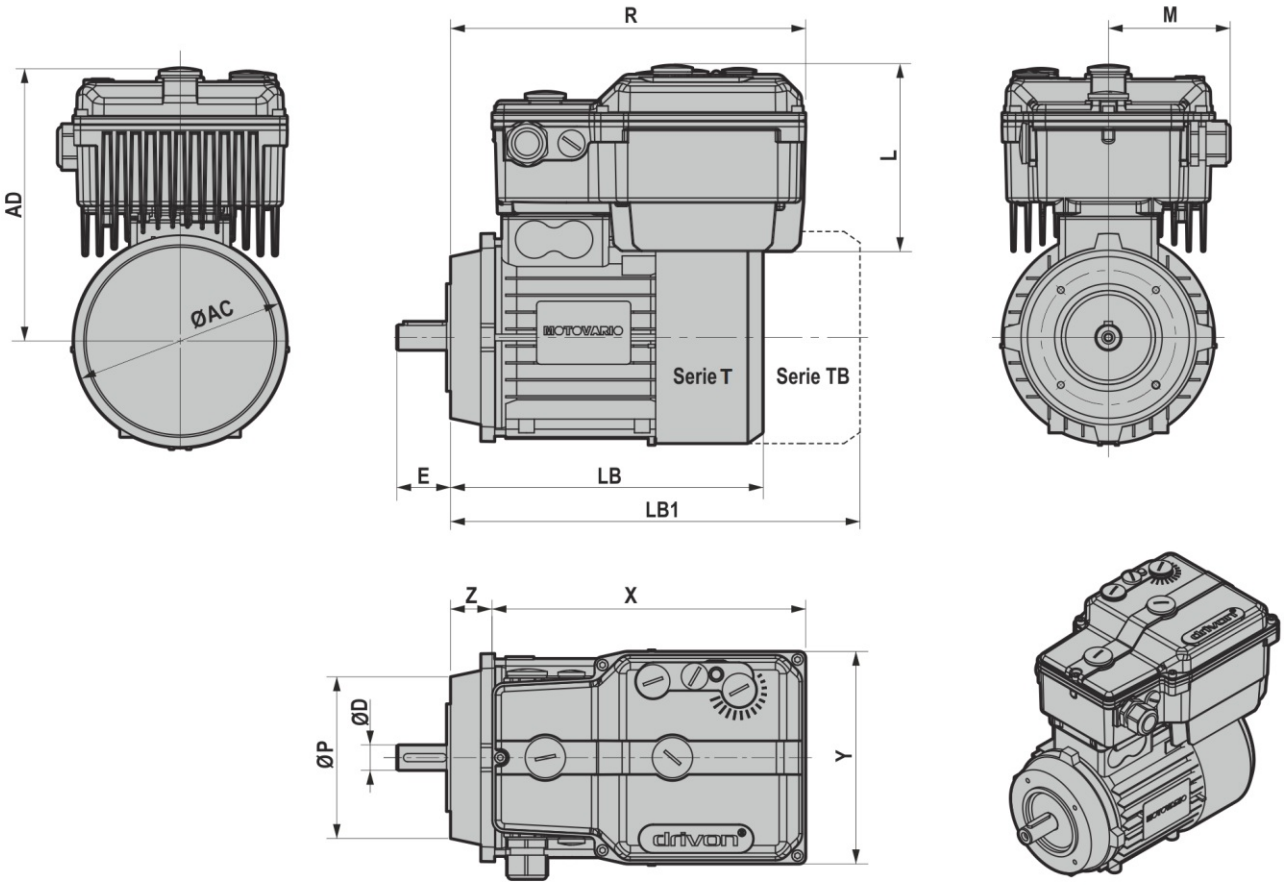

Inverter	Mot.	X	Y	L	M	Z	R	AC	P	D	E	LB	LB1	AD
S	71	233	158	139	91	27	260	139	105	14 j6	30	209	276	200
S	80	233	158	139	91	31	264	158	120	19 j6	40	233	304	209
S	90S	233	158	139	91	42	275	173	140	24 j6	50	248	325	221
S	90L	233	158	139	91	42	275	173	140	24 j6	50	273	350	221
S	100	233	158	139	91	50	283	191	160	28 j6	60	308	390	232
M	90S	258	193	152	102	42	275	173	140	24 j6	50	248	304	215
M	90L	258	193	152	102	42	275	173	140	24 j6	50	273	350	215
M	100	258	193	152	102	41	299	191	160	28 j6	60	308	390	224
M	112	258	193	152	102	44	302	211	160	28 j6	60	323	419	238
M	132S	258	193	152	102	58	316	249	200	38 k6	80	372	462	276
M	132M	258	193	152	102	58	316	249	200	38 k6	80	410	514	276

8.3 DIMENSIONS

8.3.3 Mounting positions B3

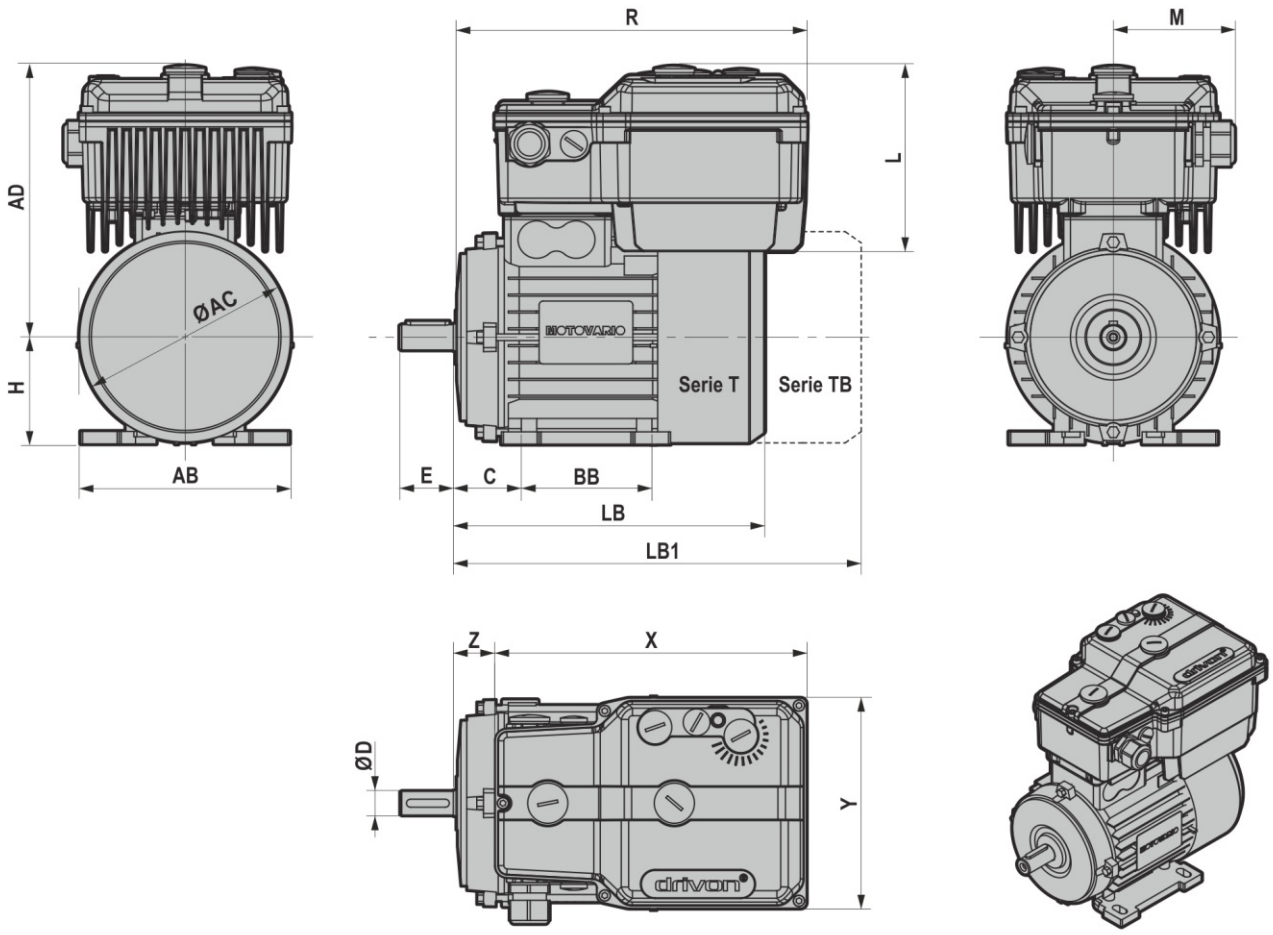

Inverter	Mot.	X	Y	L	M	Z	R	AC	D	E	LB	LB1	AD	AB	C	BB	H
S	71	233	158	139	91	27	260	139	14 j6	30	209	276	200	132	44	90	71
S	80	233	158	139	91	31	264	158	19 j6	40	233	304	209	156	49	100	80
S	90S	233	158	139	91	42	275	173	24 j6	50	248	325	221	172	54	100	90
S	90L	233	158	139	91	42	275	173	24 j6	50	273	350	221	172	54	125	90
S	100	233	158	139	91	50	283	191	28 j6	60	308	390	232	192	62	140	100
M	90S	258	193	152	102	33	291	173	24 j6	50	248	304	215	172	54	100	90
M	90L	258	193	152	102	33	291	173	24 j6	50	273	350	215	172	54	125	90
M	100	258	193	152	102	41	299	191	28 j6	60	308	390	224	192	62	140	100
M	112	258	193	152	102	44	302	211	28 j6	60	323	419	238	221	69	140	112
M	132S	258	193	152	102	58	316	249	38 k6	80	372	462	276	260	87	140	132
M	132M	258	193	152	102	58	316	249	38 k6	80	410	514	276	260	87	140	132

8.4 WEIGHTS

DV123		
Mot.	P [kW]	kg
TS71	0,37	8,18
TS80	0,55	10,58
TH80	0,75	13,86
TH90	1,1	17,36
TH90	1,5	18,56

DV340		
Mot.	P [kW]	kg
TS71	0,37	8,3
TS80	0,55	10,7
TH80	0,75	14,04
TH90	1,1	17,54
TH90	1,5	18,74
TH100	2,2	27,37
TH100	3	29,37
TH112	4	35,35
TH132	5,5	50,35

9.1 ACCESSORIES AND OPTIONS

Drivon has been designed based on a modular approach so that its standard features can be expanded through appropriate hardware expansions which can be selected upon ordering. All optional accessories, with the exception of the Intelligent Keypad (KP), must be selected when ordering.

Smart keypad (option KP)

The optional keypad KP provides a control and monitoring interface for user to

- Start the inverter motor in both operating directions with two specific buttons.
- Set the inverter motor parameters by using the menus, easily available thanks to the keypad.
- Copy up to 4 different configuration sets and duplicate them infinitely on Drivon motor-inverters requiring the same operating parameters
- Monitoring motor-inverter state and diagnose its operation
- Operate the motor in JOG mode

The keypad can be used in one of the following modes:

1. **Temporary remote connection**
   User quickly connects the keypad to the inverter through the suitable RJ connector accessible on the cover (IP20 degree of protection).
2. **Permanent remote connection**

   User connects the keypad to the inverter through a cable gland (IP55 degree of protection). The keypad is not mechanically fixed to the inverter.
3. **Permanent integrated connection**

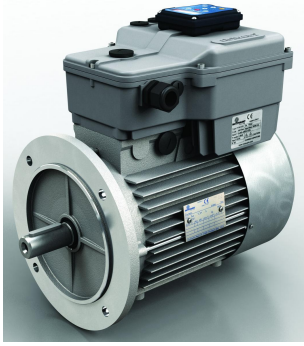

   User connects the keypad electrically and mechanically to the inverter (IP66 degree of protection).

9.1 ACCESSORIES AND OPTIONS

I/O expansion module (options IOA, IOB)

The I/O expansion module provides additional digital and analogue interfaces to supplement standard motor-inverter interfaces. These expansions make the following connections available:

- PT100/NTC/PTC temperature sensor input
- No.1 Auxiliary analogue input +/-10V or 4-20mA
- No.1 Digital input with frequency up to 100KHz at 24V
- No.1 24V auxiliary digital output
- No.1 Switching relay digital output (max 250V)
- No.1 0-10V analogue output with 500Hz maximum band

The same module comes in two versions – IOA and IOB – with different electric connections to the outside environment:

- IOA: version with cable gland
- IOB: version with two M12 A-code connectors (male connector for Input signals, female connector for Output signals)

Potentiometer and mode selector (option PS)

This supplementary module provides the user with an external Potentiometer and an external Direction Selector (IP66 degree of protection) for manual start and speed selection control.

- Single-turn rotary potentiometer for frequency selection 0....fmax (Hz)
- Three-position direction selector FWD/STOP/REV

Minimum and maximum frequencies, as well as acceleration and deceleration ramps are factory presets. User may make changes to these presets from the KP keypad or via the USB connection to the PC using the Motovario BSi software tool.

Electro-mechanical braking module (option EMB)
The electro-mechanical braking module implements the Operation and Control feature for a self-braking motor equipped with DC brake. This module independently activates and deactivates the brake in perfect sync with motor behaviour through flexible (user-selectable) parameter setting for response timing and speeds. It is available for all Drivon power supply options (1ph230V and 3ph400V). The inverter independently provides the brake coil with the appropriate power supply. User need not carry out any assembly or wiring connections as they are done at the factory.
This option must be requested upon ordering.

9.1 ACCESSORIES AND OPTIONS

Dynamic braking module (chopper) (option BC)

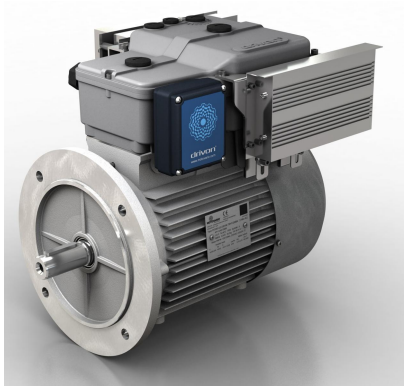

Drivon has a four-segment operating principle. This means it can control the motor even when it is acting as a generator under braking and, generally speaking, when mechanical loading causes the motor to run faster than command speed. Option BC dissipates regenerated energy from the motor to an additional resistor enabling Drivon to brake the load with a power equal to nominal motor power. It consists of a resistive element and an electronic control element, both fixed to the side of the inverter. On self-braking motors, the BC module doubles as EMB module.

Profibus communication module DPV1 (option PDP)

This optional module enables the communication through standard Profibus DPV1 field bus. This module makes it possible to assign a network address through on-board manual rotary selector switches. In addition, the user can activate a termination resistor through jumpers as required. Two M12 B-code connectors (a male and female connector) are provided on the outside of the module for Line connection to field network.

Ethercat communication module (option ETC)

This optional module implements hardware and software interfaces for Real-Time-Ethernet networks over Ethercat profile. Two M12 D-code connectors (a male and a female connector) are provided on the outside of the module for Line connection to field network.

Emergency stop button (option FEM)
This option consists in an external emergency stop button that activates the Drivon's STO function.
Pressing the button cuts power to the motor in full safety in accordance with EN ISO 13849-1 and EN61508, whereas the inverter remains powered.

10.1 SALES CONDITIONS

All the products supplied by the Motovario are exclusively regulated by the general sales terms and conditions available on our website:
http://www.motovario.com/eng/corporate/sales-conditions

ATTENTION: Supply information
This catalogue refers to the DRIVON inverter motor, comprising an electric motor and an inverter, both supplied by Motovario. The combination of the single inverter to any electric motor manufactured by other companies does not guarantee the performance values indicated in this catalogue and consequently it does not fall under the Warranty Conditions of Motovario S.p.A.

NOTES

NOTES

NOTES

D / IEC / STD / EN / REV.0 / 2018