TECHNICAL CATALOGUE

M SERIES

ELECTRIC **MOTORS**

STANDARD **IEC**

MOTOVARIO®
HEART OF MOTION
a TECO Group company

INDEX

1. GENERAL FEATURES

1.1 GENERAL FEATURES 4

1.2 CONFORMITY AND DIRECTIVES 5
1.2.1 Conformity with standards 5
1.2.2 Conformity with Community Directives - CE Marking 6
1.2.3 Conformity with UL/CSA standards 6
1.2.4 Conformity with EAC standards (former GOST) 6
1.2.5 Conformity with European Directive 2014/34/UE (ATEX) 6
1.2.6 Conformity with CCC standards 6

1.3 SYMBOLS AND FORMULAS 7
1.3.1 Physical measurements and conversion factors 7
1.3.2 Formulas 8
1.3.3 Nominal characteristics 9
1.3.4 Tolerances 11

1.4 DESIGN FEATURES 12
1.4.1 Designation 12
1.4.2 Design features 13
1.4.3 Flange B5 16
1.4.4 Flange B14 17
1.4.5 Motor shaft 18
1.4.6 Bearings 19
1.4.7 Overhung load 20
1.4.8 Axial load 21

1.5 MOUNTING POSITIONS 22

1.6 PROTECTION RATINGS 23

1.7 THERMAL CLASSIFICATION 24
1.7.1 Insulation classes 24
1.7.2 Thermal class 24

2. PRODUCT INFORMATION

2.1 OPERATING CONDITIONS 25
2.1.1 STD ambient conditions – Derating for non-standard conditions 25
2.1.2 Options for particularly humid environments 26
2.1.3 Low temperature construction (-40°C / -15°C) 27
2.1.4 High temperature construction (+60°C / +90°C) 27

2.2 ELECTRIC MOTORS EFFICIENCY 28
2.2.1 Standard high efficiency (TS), high (TH) and premium (TP) motors 28

INDEX

2.2.2 EC Regulation No. 640/2009 29

2.3 POWER CONDITIONS 30
2.3.1 Standard construction motor voltage and frequency 30
2.3.2 Standard electrical construction motors with ST2 option 30
2.3.3 Motors with non-standard power voltages (SP1 - optional) 31
2.3.4 Inverter power supply 32

2.4 SOUND PRESSURE LEVEL 34

2.5 DUTY 35

2.6 OPTIONAL PROTECTION EQUIPMENT 38
2.6.1 Bimetal thermal cutouts 38
2.6.2 Thermistors (PTC) 39

2.7 COOLING SYSTEMS 40
2.7.1 Cooling systems 40
2.7.2 Forced ventilation 41

2.8 OTHER OPTIONAL CONSTRUCTIONS 43
2.8.1 Version with roof 43
2.8.2 Backstop device 43
2.8.3 Rapid connection power supply 44
2.8.4 Incremental encoder 46

2.9 SERIES AND HOOKUP 48
2.9.1 Direction of rotation - Hookup 48
2.9.2 TS-TH and TP series 49
2.9.3 D series 49
2.9.4 S series 50
2.9.5 HSE series 51

2.10 BRAKE MOTORS 53
2.10.1 Brake motors 53
2.10.2 FM brake 54
2.10.3 ML brake 58
2.10.4 Hookup for FM and ML brakes 61
2.10.5 MS brake 63
2.10.6 Hookup for MS brakes 66
2.10.7 Notes and calculations 68

2.11 ELECTRIC MOTOR IDENTIFICATION 71

3. PERFORMANCES

3.1 TS-TBS 75

INDEX

3.2 TH-TBH 81

3.3 TP-TBP 84

3.4 S 87

3.5 HSE 88

3.6 D-DB 89

4. DIMENSIONS

4.1 DIMENSIONS 91

4.1.1 General dimensions 91

4.1.2 S series 93

4.1.3 HSE series 94

4.1.4 Incremental standard encoder 95

4.1.5 Brake motors 96

4.1.6 Double brake 98

4.1.7 Brake motors with incremental encoder 99

4.1.8 Forced ventilation 100

4.1.9 Position of terminal box-Release lever-Forced ventilation connector 101

4.1.10 Version with rain cover 101

5. ACCESSORIES AND OPTIONS

5.1 OPTIONAL CONSTRUCTIONS - ACCESSORIES 102

6. SALES CONDITIONS

6.1 SALES CONDITIONS 104

1.1 GENERAL FEATURES

Three-phase and single-phase asynchronous electric motors, totally enclosed, with external fan ventilation, cage rotor in die-cast aluminium alloy or aluminium, insulation class F, protection degree IP55, standardised height to centre and dimensions from 56 to 160S, standardised powers from 0.09 to 11 kW.

Standard production	Series
Three-phase, single polarity, standard efficiency	TS
Three-phase, single polarity, high efficiency	TH
Three-phase, single polarity, premium efficiency	TP
Three-phase, double polarity	D
Single-phase	S
Single-phase, high starting torque, electronic cutout	HSE
Three-phase, single polarity, self-braking motor, standard efficiency	TBS
Three-phase, single polarity, self-braking motor, high efficiency	TBH
Three-phase, single polarity, self-braking motor, high efficiency	TBP
Three-phase, double polarity, self-braking motor	DB

1.2 CONFORMITY AND DIRECTIVES

1.2.1 Conformity with standards

The standard electric motors conform with the following Italian, European and international standards for rotating electrical machines:

TITLE	CEI / EN	IEC
General prescriptions for rotating electrical machines	**CEI EN 60034-1**	**IEC 60034-1**
Normalised methods for the determination, by testing, of the loss and efficiency of rotating electrical machines (excluding traction vehicle motors)	**CEI EN 60034-2-1**	**IEC 60034-2-1**
Classification of the protection ratings of rotating electrical machines	**CEI EN 60034-5**	**IEC 60034-5**
Cooling systems for electrical machines	**CEI EN 60034-6**	**IEC 60034-6**
Mounting position and installation type codes	**CEI EN 60034-7**	**IEC 60034-7**
Marking terminals and direction of rotation for rotating electrical machines	**CEI 2-8**	**IEC 60034-8**
Noise limits	**CEI EN 60034-9**	**IEC 60034-9**
Vibration levels for electrical machines	**CEI EN 60034-14**	**IEC 60034-14**
Efficiency classes for alternate current motors powered by mains (IE Code)	**CEI EN 60034-30-1**	**IEC 60034-30-1**
Dimensions and nominal powers of rotating electrical machines	**EN 50347**	**IEC 60072**
Nominal voltage for low voltage public power grids	**CEI 8-6**	**IEC 60038**

1.2 CONFORMITY AND DIRECTIVES

1.2.2 Conformity with Community Directives - CE Marking

The standard electric motors are in conformity with the following Directives:
- Low Voltage Directive 2014/35/UE;
- Directive EMC 2014/30/UE regarding intrinsic characteristics in relation to emissions and levels of immunity;
- Directive RoHS 2015/863/UE relating to the prohibition or limitation of use of noxious substances in electrical and electronic equipment;
- ErP Directive 2009/125 / EC regarding eco-compatible design and its implementing regulation n ° 640/2009.

The manufacturer of the machine is exclusively responsible for the conformity with the Machinery Directive and EMC Directive of a complete installation. Electric motors may not be commissioned until the machines to which they are coupled have themselves been declared conforming with the Machinery Directive (Certificate of Incorporation - Directive 2006/42/CE Annex II 1B).

1.2.3 Conformity with UL/CSA standards

On request, TS, TH, TP, TBS, TBH, TBP and D series electric motors can be manufactured in conformity with the following standards:
- UL1004 “Electric motors”
- CSA C22.2 No.100-04 “Motors and Generators” for the USA and CANADA markets respectively.

1.2.4 Conformity with EAC standards (former GOST)

On request, TS, TH, TBS, TBH, TP, TBP, D, DB, S, HSE series electric motors can be manufactured in conformity with the following standards:
- EAC

for Russian, Belarussian and Kazakh market.

1.2.5 Conformity with European Directive 2014/34/UE (ATEX)

On request, TS, TH, TP, D and S series electric motors can be manufactured in conformity with the following standards:
- IEC-CEI-EN 60079-0 – Explosive Atmospheres – Equipment – General Requirements;
- IEC-CEI-EN 60079-15 - Explosive Atmospheres – Equipment Protection by Type of Protection 'n';
- IEC-CEI-EN 60079-31 – Explosive Atmospheres – Equipment Dust Ignition Protection by Enclosure “t”;

and hence meet the requirements of European Directive 2014/34/UE (ATEX).
In particular, MOTOVARIO electric motors may be constructed for Group II, category 3, atmosphere G with temperature class T3 (200°C) and protection mode “nA” or atmosphere D with temperature class T135°C and Type of Protection “tc”, and hence bear the double marking:

- **II 3G Ex nA IIB T3 Gc / II 3D Ex tc IIIB T135 °C Dc.**

For further information, consult the respective documentation.

1.2.6 Conformity with CCC standards

On request, TS, TH series electric motors can be manufactured in conformity with the following standards:
- CCC

for the Chinese market, limited to the following sizes:
- 2-pole from size 63A2 0.18 kW to size 90L2 2.2 kW
- 4-pole from size 63A4 0.12 kW to size 90S4 1.1 kW
- 6-pole from size 63A6 0.09 kW to size 90S6 0.75 kW

1.3 SYMBOLS AND FORMULAS

1.3.1 Physical measurements and conversion factors

Physical measurement	Unit of measurement		Conversion from	
	SI units	Imperial units	SI units to Imperial units	Imperial units to SI units
length	m = metre	ft = foot	1 ft = 0.3048 m	1 m = 3.2808 ft
		in = inch	1 in = 25.4 mm	1 mm = 0.03937 in
speed	m/s	ft/s	1 ft/s = 0.3048 m/s	1 m/s = 3.2808 ft/s
		in/s	1 in/s = 25.4 mm/s	1 mm/s = 0.03937 in/s
weight	kg = kilogram	lb = pound	1 lb = 0.4536 kg	1 kg = 2.205 lb
density	kg/m^3	lb/ft^3	1 lb/ft^3 = 16.0185 kg/m^3	1 kg/m^3 = 0.0624 lb/ft^3
		lb/in^3	1 lb/in^3 = 27.6799 g/cm^3	1 g/cm^3 = 0.0361 lb/in^3
moment of inertia	$kg{\cdot}m^2$	$lb{\cdot}ft^2$	1 $lb{\cdot}ft^2$ = 0.4214 $kg{\cdot}m^2$	1 $kg{\cdot}m^2$ = 23.3 $lb{\cdot}ft^2$
		$lb{\cdot}in^2$	1 $lb{\cdot}in^2$ = 2.264 $kg{\cdot}cm^2$	1 $kg{\cdot}cm^2$ = 0.417 $lb{\cdot}in^2$
force	N = newton	lbf = pound-force	1 lbf = 4.44822 N	1 N = 0.2248 lbf
	kgf* = kilogram-force		1 lbf = 0.4536 kgf	1 kgf = 2.2045 lbf
				(1 N = 0.102 kgf 1 kgf = 9.8 N)
mechanical moment	[Nm]	lbf·ft	1 lbf·ft = 0.138 kgf·m	1 kgf·m = 7.23 lbf·ft
	kgf·m*		1 lbf·ft = 1.36 N·m	1 N·m = 0.738 lbf·ft
energy	J = Joule (=Nm)	lbf·ft	1 lbf·ft = 1.36 J	1 J = 0.738 lbf·ft
	kWh = kilowatt hour		1 lbf·ft = $3.7{\cdot}10^{-7}$ kWh	1 kWh = $2.6{\cdot}10^{6}$ lbf·ft
pressure	Pa = Pascal (=N/m2)	psi (=lbf/ in^2)	1 psi = $6.895{\cdot}10^{3}$ Pa (N/m^2)	1 Pa = $1.45{\cdot}10^{-4}$ psi
	atm* = atmosphere		1 psi = 0.068 atm	1 atm = 14.7 psi
	bar*		1 psi = 0.0689 bar	(1Pa=$9.87{\cdot}10^{-6}$atm=10^{-5}bar)
power	W = Watt	hp = horse power	1 hp = 745.7 W	1 W = 0.00134 hp
		lbf·ft/s	1 lbf·ft/s = 1.356 W	1 W = 0.738 ft·lbf/s

(*) unit of measurement not included in SI system

1.3 SYMBOLS AND FORMULAS

1.3.2 Formulas

MEASUREMENT	SYMBOLS AND UNITS OF MEASUREMENT	DESCRIPTION	RELATIONSHIPS
phase voltage and current	E [V] I_E [A]	voltage and current measured between phase and neutral	
voltage and current concatenated	V [V] I_V [A]	voltage and current measured between phase and phase (threephase systems)	three-phase system 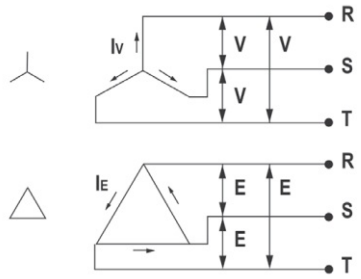 $V = \sqrt{3}E \quad I_V = I_E/\sqrt{3}$
speed of rotation	n [min^{-1}] ω [rad/s]	motor shaft speed	$n = (60/2p)\times\omega = 9{,}55\times\omega$
force **weight force**	F [N] P [N]	product of mass x acceleration product of mass x gravitational acceleration	$F = m_{[kg]}\times a_{[m/s^2]}$ $P = m_{[kg]}\times 9.81_{[m/s^2]}$
moment	M [Nm]	product of force x distance r of point of application from axis	$M = F_{[N]}\times r_{[m]}$
linear power	P [W]	product of force x linear speed	$P = F_{[N]}\times V_{[m/s]}$
angular power	P [W]	product of torque x rotational speed	$P = M_{[Nm]}\times \omega_{[rad/s]}$
energy	W [J]	power delivery over time	$W = P_{[W]}\times t_{[s]}$

1.3.3 Nominal characteristics

Nominal characteristics: total of numerical electrical and mechanical values (power voltage, frequency, current, speed, power delivery,...) together with their duration and sequence in time, attributed to the machine and indicated on the nameplate, in conformity with the specified conditions. In particular, the following values in relation to the operation of the motor; the same symbols are used in the performance tables.

MEASUREMENT	SYMBOLS AND UNITS OF MEASUREMENT	DESCRIPTION
nominal voltage	V_n [V]	concatenated voltage at the machine's terminals at nominal power
nominal current	I_n [A]	current absorbed by the motor at nominal power
starting current	I_s [A]	line current absorbed by the motor at nominal starting voltage and frequency
nominal torque	M_n [Nm]	torque delivered by motor shaft at nominal conditions
starting torque	M_s [Nm]	torque delivered by the motor shaft at starting
sag torque	M_i [Nm]	minimum asynchronous torque under normal running conditions developed by the motor at speeds from zero to maximum torque speed; this definition does not apply to asynchronous motors whose torque decreases continuously as speed increases
maximum torque	M_{max} [Nm]	maximum torque under normal running conditions developed by the motor without a sudden drop in speed; this definition does not apply to asynchronous motors whose torque decreases continuously as speed increases 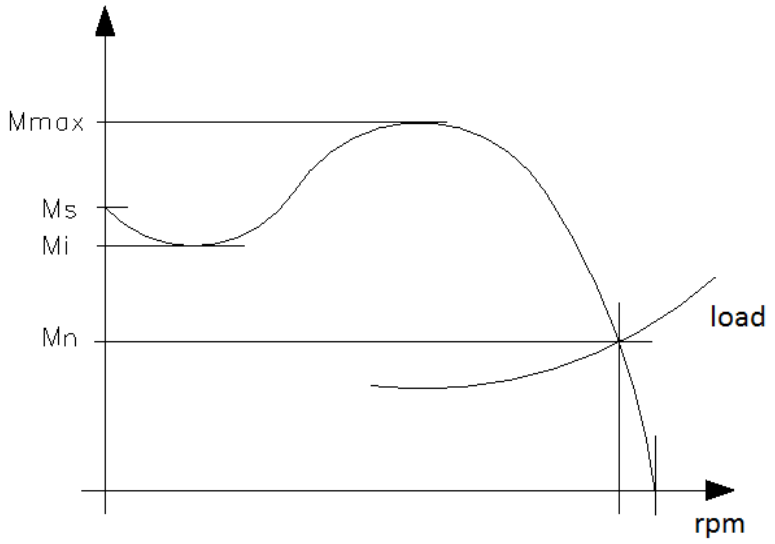
synchronous speed	ω_s [rad/s] n_s [min^{-1}]	synchronous motor shaft speed under no load; the following relations apply: $n_s = 120 \times f_n / p$ [rpm] $\omega_s = 4p \times f_n / p$ [rad/s] $\omega_s = n_s / 9{,}55$ [rad/s] where: fn = nominal power supply frequency [Hz] p = number of motor poles it follows that:

poles	rpm at 50Hz	rpm at 60Hz
2	3000	3600
4	1500	1800
6	1000	1200
8	750	900

nominal speed	n_n [rpm] ω_n [rad/s]	motor shaft speed in nominal conditions at nominal power

1.3 SYMBOLS AND FORMULAS

creep **nominal creep**	s s_n	ratio between the deviation of the shaft speed relative to the synchronous speed and the synchronous speed itself; normally declared as a percentage: $s = (\omega_s - \omega) / \omega_s \times 100$ $s_n = (\omega_s - \omega_n) / \omega_s \times 100$
mechanical power delivery	P [W]	numerical value of mechanical power delivered to the shaft; the relation between power, torque and speed is: $P_{[W]} = T_{[Nm]} \times \omega_{[rad/s]}$
nominal power delivery	P_n [W]	numerical value of the mechanical power delivered to the shaft at nominal conditions $P_{n\,(W)} = T_{n\,[Nm]} \times \omega_{n\,[rad/s]}$
power factor **nominal power factor**	$\cos\varphi$ $\cos\varphi_n$	cosine of the phase angle between the voltage and current, a function of the load characteristics
active absorbed electrical power	P_a [W]	numerical value of the active electrical power absorbed from the mains; the following relations apply: three-phase system $P_{a\,[W]} = \sqrt{3} V_{[V]} I_{[A]} \cos\varphi$ single-phase system $P_{a\,[W]} = V_{[V]} I_{[A]} \cos\varphi$
reactive electrical power absorbed	Q_a [VAr]	numerical value of the reactive electrical power absorbed from the mains; the following relations apply: three-phase system $Q_{a\,[W]} = \sqrt{3} V_{[V]} I_{[A]} \mathrm{sen}\varphi$ single-phase system $Q_{a\,[W]} = V_{[V]} I_{[A]} \mathrm{sen}\varphi$
reactive power furnished by an array of capacitors	Q_c [VAr]	numerical value of the reactive electrical power furnished by an array of capacitors of capacity C [μF], for three-phase systems: $Q_c = \sqrt{3} V^2_{[V]} C_{[m\mu F]} 2\pi f_{n\,[Hz]}$
efficiency	η	ratio between mechanical power delivery and electrical power absorption $\eta = P / P_a$ $\eta\% = P / P_a \times 100$ once we know the efficiency, the power delivered to the shaft can be calculated as follows: asynchronous three-phase motor $P_{[W]} = \sqrt{3} V_{[V]} I_{V[A]} \eta \cos\varphi$ asynchronous single-phase motor $P_{[W]} = E_{[V]} I_{E[A]} \eta \cos\varphi$
moment of inertia	J [kg×m^2]	Product of rotating mass m [kg] and the square of the equivalent radius of rotation r [m]: $J = mr^2$ In practice one uses PD2, the product of the weight [kgp] and the square of the equivalent diameter of rotation D [m]; it follows that: $PD^2_{[kgp \times m^2]} = 4 J_{[kg \times m^2]}$ Note that the weight in the practical system corresponds (numerically) to the mass in the SI system
acceleration time **braking time**	t_a [s] t_f [s]	In evaluating the acceleration and braking times we must sum the motor's moment of inertia Jm to that of the load Jext, to obtain the total moment of inertia: $J_t = J_m + J_{ext}$ and analogously: $PD^2_t = PD^2_m + PD^2_{txt}$ Furthermore, to the torque delivered by the motor Mm, which may be accelerating or braking, we must subtract or add the resisting torque Mr, to obtain, as a first approximation: during acceleration, the accelerating torque: $M_a = M_m - M_r$ during braking, the braking torque: $M_f = M_m + M_r$ As a first approximation we can use for Mm the value of the starting torque as given in the catalogue; a more precise calculation, given the load curve, can be obtained by integrating from 0 to the nominal speed. The acceleration time, for a speed variation of Δω (or Δn), is: in the SI system $t_a = [J_t / M_a] \times \Delta\omega$ [kg×m^2] in the practical system $t_a = [2.67\ PD^2_t / M_a] \times \Delta n \times 10^{-3}$ [kgp×m^2] The same formulas apply to the braking time, with Ma replaced by Mf and bearing in mind that Ma and Δn are negative. If the external loads are connected by gear reducers or speed multipliers, the respective moments of inertia must be referred to the motor axis by multiplying them by the square of the ratio between the load speed nc and the motor speed nm: $J_{ext} (n_c / n_m)^2$ and analogously for PD^2. To refer the inertia to a load of mass M drive in a linear motion by the motor to the motor's shaft, we must know the ratio between the linear speed v and the corresponding speed n (or ω) of the motor; the corresponding moment of inertia will be: in the SI system $J_{ext} = M_{[kg]} (v_{[m/s]} / \omega_{m[rad/s]})^2$ in the practical system $PD^2 = 365\ P_{[kgp]} (v_{[m/s]} / n_{m[rpm]})^2$ where P is the weight of the moving part.

1.3 SYMBOLS AND FORMULAS

1.3.4 Tolerances

	TOLERANCES
Efficiency (ratio between measured power delivery and absorption)	-15% di (1-h)
Power factor	-1/6 di (1-cosj) 0.02 min 0.07 max
Creep at full load and at operating temperature - Power delivery ≥ 1kW - Power delivery < 1kW	 ±20% ±30%
Current with rotor locked with any specific starting device	20%
Torque with rotor locked	-15% +25%
Sag torque	-15%
Maximum torque	-10%
Moment of inertia	±10%
Sound pressure level	+3dBA
Height of axis	-0.5mm.
Flange centring diameter	J6
Outer diameter of shaft on delivery end D - Up to 28mm - Over 28mm	 j6 k6
Key dimensions F x GD	h9
Keyway width F	N9

1.4 DESIGN FEATURES

1.4.1 Designation

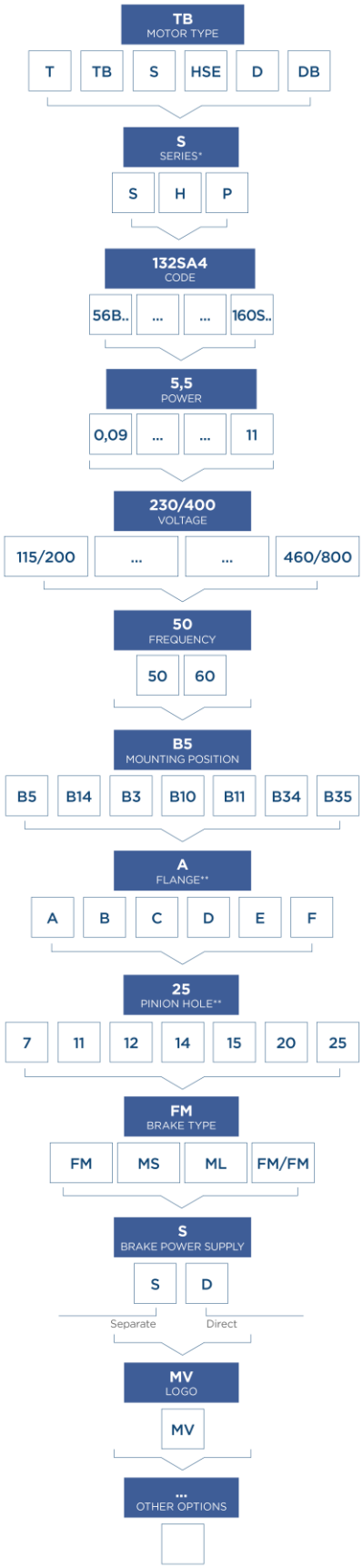

*T/TB series motors only
**Mounting positions B10/B11 only

1.4 DESIGN FEATURES

1.4.2 Design features

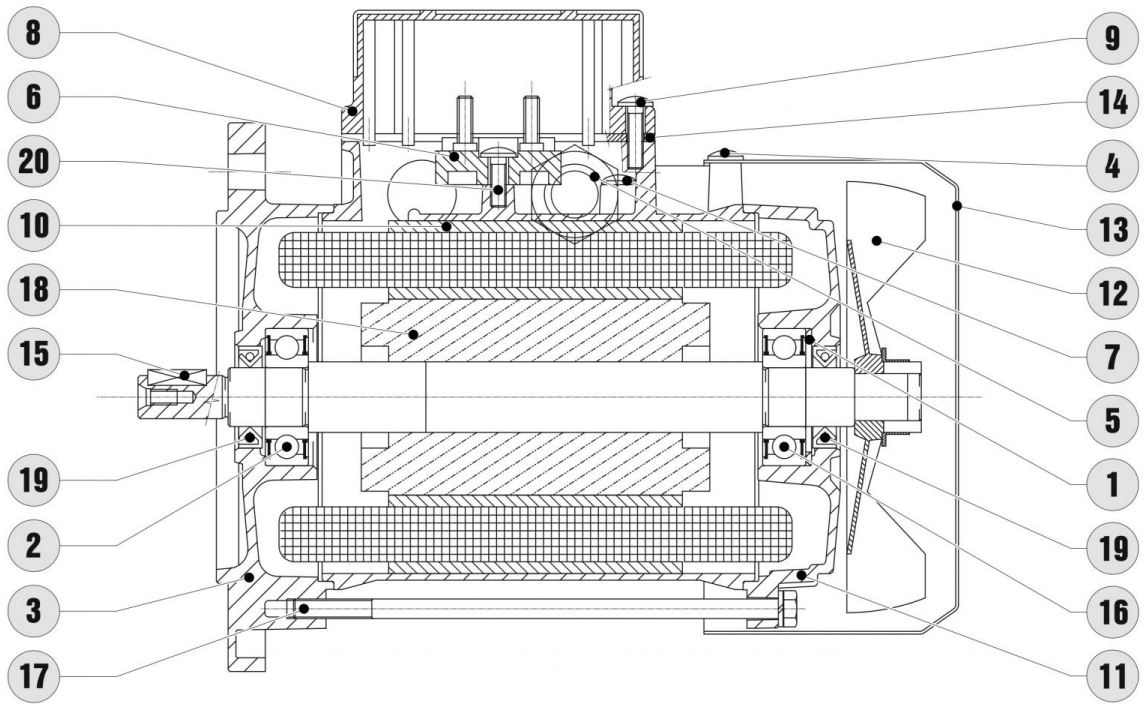

1. Preloaded spring
2. Bearing on driving side
3. Flange/Shield driving side
4. Fan cover fastening screws
5. Cable gland
6. Terminal box
7. Ground screw
8. Terminal board cover
9. Terminal box fastening screws
10. Casing complete with winding
11. Shield opposite to driving side
12. Fan
13. Fan cover
14. Terminal box cover gasket F
15. Key
16. Bearing opposite to driving side
17. Stud
18. Rotor with shaft
19. Oil seal
20. Fastening screw for terminal box

1.4 DESIGN FEATURES

Casing

- in die-cast aluminium alloy, chosen for its high tensile strength and corrosion resistance from size 56 to size 160S;
- finned; not painted from size 56 to size 160S (painting optional);
- fitted with lifting rings starting from size 100;
- fitted for mounting feet opposite the terminal block from size 56 to size 63; fitted for mounting feet opposite the terminal block and in the two side positions from size 71 to size 160S;
- fitted with clamp for grounding inside the terminal block; option of external GND connection on the motor casing. The terminal is marked with the symbol ⏚ .

Shaft
In C40 steel or similar; dimensions, standardised output shaft and key, according to IEC60072-1; end of shaft with threaded hole on driving side. Optional double-ended shaft from size 63 to size 160S.

Rotor
The rotor is the squirrel-cage type in die-cast aluminium or aluminium alloy. The aluminium alloy (silumin) is used on single-phase motors to increase their starting torque. The angle, number of slots and geometrical shape of the rotors have been designed in relation to the number of stator slots and the polarity of the motor to ensure the most regular operation even in variable speed applications, decreasing the phenomenon of torque pulses, detrimental to the motor's correct operation and a cause of running noise. Rotor balancing, from frame size 90, is performed dynamically with the half-key method in accordance with ISO 2373 standard rating G6.3 for normal vibration. On request it is possible to have increased balancing (rating G2.3).

Stator and Winding

- Laminations with controlled magnetic properties. All TS motors are constructed with low loss magnetic laminations. All TH and TP motors are constructed with very low loss isolated magnetic laminations.
- Appropriate number of slots and geometrical shape in relation to the motor's polarity so as to enable the most regular operation;
- Winding made with glazing copper G2 degree in H class, capable of providing considerable mechanical strength and ensuring an adequate thermal reserve such as to slow down the ageing of the motor;
- Class F insulation system;
- 100% testing of all electrical parameters at line end.

Flange / Shield
Die-cast aluminium alloy, excluding B5 flange for size 160S (cast iron); cast iron rear shield on versions with FM or MS brake and backstop device.

Terminal block cover
In die-cast aluminium alloy with Motovario logo. All terminal box covers have a pre-defined thinner section to be easily broken, which is suitable for the fitting of a cable gland (M20 on size 63-71-80, M25 on size 90-100-112, M32 on size 132-160S) and allowing the insertion of power cable on fan or flange sides.

Fan
Centrifugal fan with radial blades to enable cooling in both directions of rotation, keyed externally onto the non-drive-end shaft. Made of loaded thermoplastic, suitable for normal motor operating temperatures.
Optionally in aluminium for very high/low ambient temperatures, or for EU ATEX versions.

Fan cover
Made of galvanised stamped plate, suitably shaped to avoid phenomena of resonance and to improve the flow of air over the motor casing. The air feed grill has holes of a size, in relation to the distance from the accessible rotating parts, in conformity with the safety requirements of the UNI EN 294 standard.

1.4 DESIGN FEATURES

Cable glands and plugs
Cable glands and plugs are in compliance with metric standardization.

STANDARD MOTOR (TS, TH, TP, D, S, HSE)						
Size	Fitted for cable gland	Cable gland included	Plugs included	Cable entry point Ø min - max [mm]	Power terminal clamps	Tightening torque max [Nm]
56	2 x M16 x 1,5 (2 for side)	1 x M16 x 1,5	-	5 - 10	M4	2
63	4 x M16 x 1,5 (2 for side)	1 x M16 x 1,5 (1)	-	5 - 10	M4	2
71 - 80	2 x M16 x 1,5 2 x M20 x 1,5 (1 + 1 for side)	1 x M20 x 1,5 (1)	-	6 - 12	M4	2
90	2x M25 x 1,5 (1 for side)	1 x M25 x 1,5	1 x M25 x 1,5	9 - 17	M5	3
100	2x M25 x 1,5 (1 for side)	1 x M25 x 1,5	1 x M25 x 1,5	9 - 17	M5	3
112	2x M25 x 1,5 (1 for side)	1 x M25 x 1,5	1 x M25 x 1,5	9 - 17	M5	3
132 - 160S	2x M32 x 1,5 (1 for side)	1 x M32 x 1,5	1 x M32 x 1,5	11 - 21	M6	4

BRAKE MOTOR (TBS, TBH, TBP, DB)						
Size	Cable routing	Cable glands	Plugs	Cable entry point Ø min - max [mm]	Power terminal clamps	Tightening torque max [Nm]
63	4 x M16 x 1,5 (2 for side)	2 x M16 x 1,5 (2)	2 o 3 x M20 x1,5 (2)	5 - 10	M4	2
71 - 80	4 x M20 x 1,5 (2 for side)	1 x M20 x 1,5 1 x M16 x 1,5 (2)	2 o 3 x M20 x1,5 (2)	6 - 12	M4	2
90	2 x M25 x 1,5 2 x M20 x 1,5	1 x M25 x 1,5 1 x M20 x 1,5 (3)	1 x M25 x 1,5 1 o 2 x M20 x 1,5 (3)	9 - 17	M5	3
100	2 x M25 x 1,5 2 x M20 x 1,5	1 x M25 x 1,5 1 x M20 x 1,5 (3)	1 x M25 x 1,5 1 o 2 x M20 x 1,5 (3)	9 - 17	M5	3
112	2 x M25 x 1,5 2 x M20 x 1,5	1 x M25 x 1,5 1 x M20 x 1,5 (3)	1 x M25 x 1,5 1 o 2 x M20 x 1,5 (3)	9 - 17	M5	3
132 - 160S	2x M32 x 1,5	1 x M32 x 1,5 1 x M20 x 1,5 (4)	none or 1 x M32 x 1,5	11 - 21	M6	4

Notes:

(1) For motor sizes 63-71-80 in the standard version, cable glands are not installed but are included with the motor. The cable glands may be mounted in the desired positions by breaking on of the caps on the terminal block box.
(2) a) Direct power: 3 plugs installed, 1 M16 cable gland included, the other cable gland is already installed;
b) Separate power: 2 plugs installed, both cable glands installed.
(3) a) Direct power: 3 plugs installed, 1 M20 cable gland included, the other cable gland is already installed
b) Separate power: 2 plugs installed, both cable glands installed.
(4) a) Direct power: 1 plug installed, 1 M20 cable gland included, the other cable gland is already installed;
b) Separate power: plugs not included, both cable glands installed.

For all motor sizes cable glands and nameplates may also be located opposite the standard side (respectively right and left viewed from the coupling side).
For all motor sizes mounting position B3 is mounted on feet with terminal block on the opposite side. As an option and excluding size 63, feet can be mounted also on the side with respect to the terminal block.
On request for motor sizes it is possible to have the cable gland fan side; in this case call our Technical Service for technical feasibility and dimensions.

1.4 DESIGN FEATURES

1.4.3 Flange B5

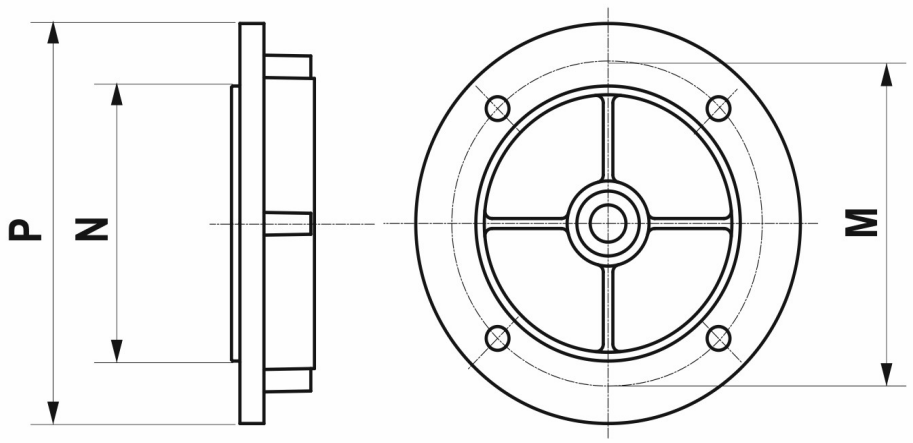

		P [mm]	M [mm]	N [mm]	F [mm]	Mat.
56	A	120	100	80	7	EN AC 46100
63	A	140	115	95	9,5	EN AC 46100
71	B	140	115	95	9,5	EN AC 46100
	A	160	130	110	9,5	EN AC 46100
80/90	B	160	130	110	9,5	EN AC 46100
	A	200	165	130	11,5	EN AC 46100
100/112	B	200	165	130	11,5	EN AC 46100
	A	250	215	180	11,5	EN AC 46100
132	B	250	215	180	11,5	EN AC 46100
	A	300	265	230	14,5	EN AC 46100
160S	A	350	300	250	18,5	EN GJL 200

F - Through holes
A - Standard
B - Reduced
Note: contact our technical service for solutions with reduced or oversize flanges

1.4 DESIGN FEATURES

1.4.4 Flange B14

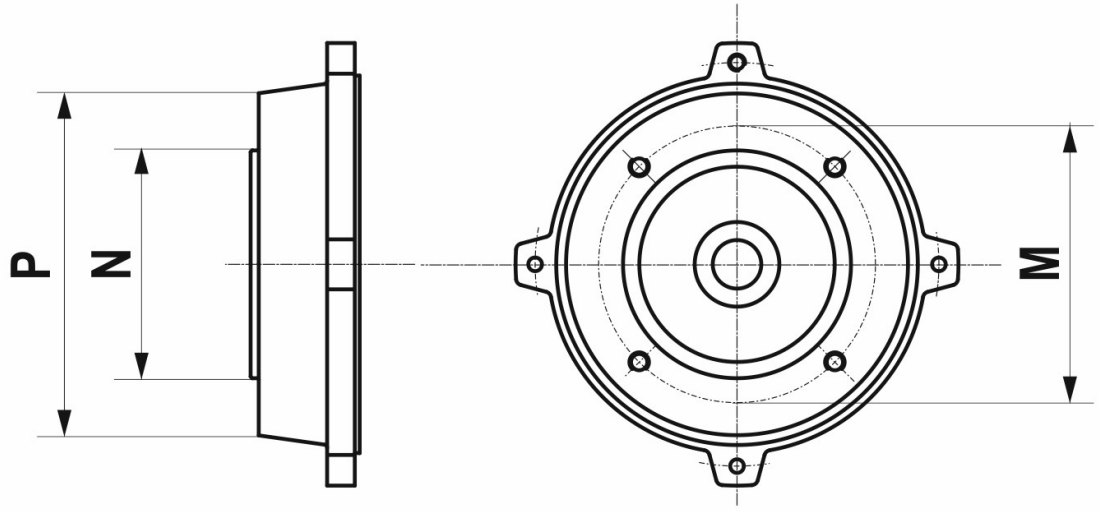

		P [mm]	M [mm]	N [mm]	F [mm]	Mat.
56	A	80	65	50	M5	EN AC 46100
63	B	80	65	50	M5	EN AC 46100
	A	90	75	60	M5	EN AC 46100
71	B	90	75	60	M5	EN AC 46100
	A	105	85	70	M6	EN AC 46100
80	B	105	85	70	M6	EN AC 46100
	A	120	100	80	M6	EN AC 46100
90	B	120	100	80	M6	EN AC 46100
	A	140	115	95	M8	EN AC 46100
100 / 112	B	140	115	95	M8	EN AC 46100
	A	160	130	110	M8	EN AC 46100
132	A	200	165	130	M10	EN AC 46100

F - Threaded holes
A - Standard
B - Reduced
Note: contact our technical service for solutions with reduced or oversize flanges

1.4 DESIGN FEATURES

1.4.5 Motor shaft

Motor shaft end – drive side

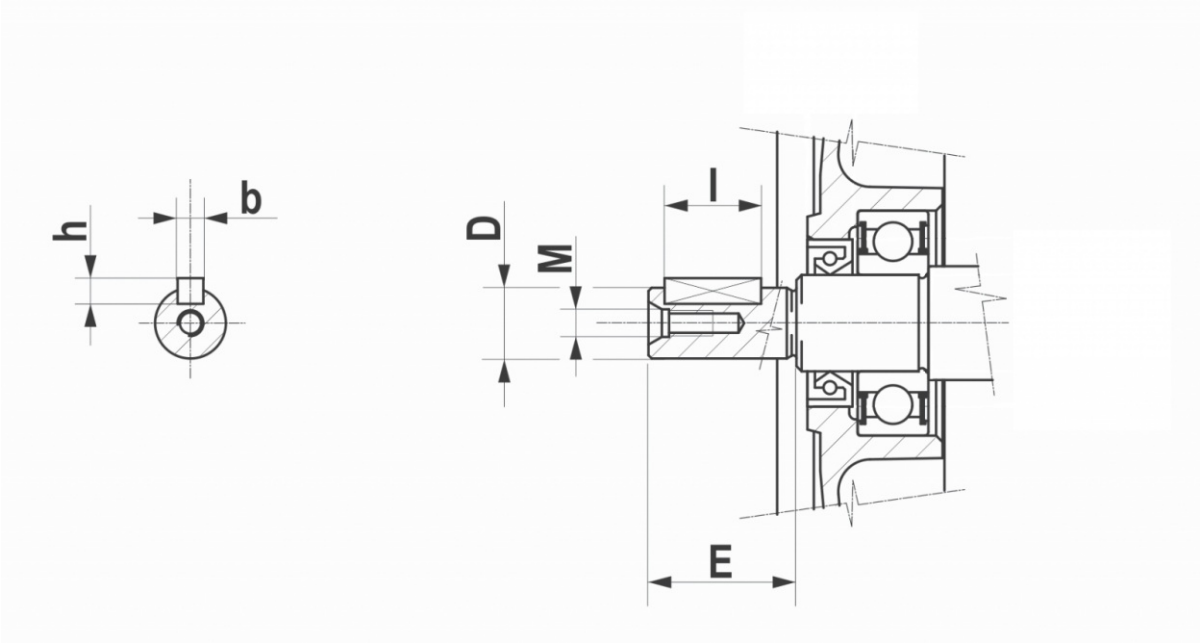

		D x E [mm]	M	b x h x l [mm]
56	A	9 x 20	M4	3 x 3 x 12
63	B	9 x 20	M4	3 x 3 x 12
	A	11 x 23	M4	4 x 4 x 15
71	B	11 x 23	M4	4 x 4 x 15
	A	14 x 30	M5	5 x 5 x 20
80	B	14 x 30	M5	5 x 5 x 20
	A	19 x 40	M6	6 x 6 x 30
90	B	19 x 40	M6	6 x 6 x 30
	A	24 x 50	M8	8 x 7 x 35
100-112	B	24 x 50	M8	8 x 7 x 35
	A	28 x 60	M10	8 x 7 x 45
132	B	28 x 60	M10	8 x 7 x 45
	A	38 x 80	M12	10 x 8 x 60
160S	B	38 x 80	M12	10 x 8 x 60
	A	42 x 110	M16	12 x 8 x 90

A - Standard
B - Reduced
Note: contact our technical service for solutions with reduced or oversize flanges

1.4 DESIGN FEATURES

1.4.6 Bearings

Radial, single race ball bearings are used, with normal play, lubricated for life, drive side shielding 2Z, non-drive side shielding 2Z or 2RS in the standard or brake versions respectively. The rear bearings are pre-loaded with a compensation ring that acts on the external ring of bearings to decrease operating noise and to enable axial movement by thermal action.

Motor size	Drive side bearing (DE)	Non-drive side bearing (NDE)	Static load coefficient C_0 [N]
56	6201 2Z	6201 2Z/2RS	n.d.
63	6202 2Z	6202 2Z/2RS	3750
71	6202 2Z	6202 2Z/2RS	3750
80	6204 2Z	6204 2Z/2RS	6550
90S/L	6205 2Z	6205 2Z/2RS	7800
100	6206 2Z	6206 2Z/2RS	11200
112	6306 2Z	6306 2Z/2RS	16000
132S/M	6308 2Z	6308 2Z/2RS	24000
160S	6309 2Z	6308 2Z/2RS	28000

1.4.7 Overhung load

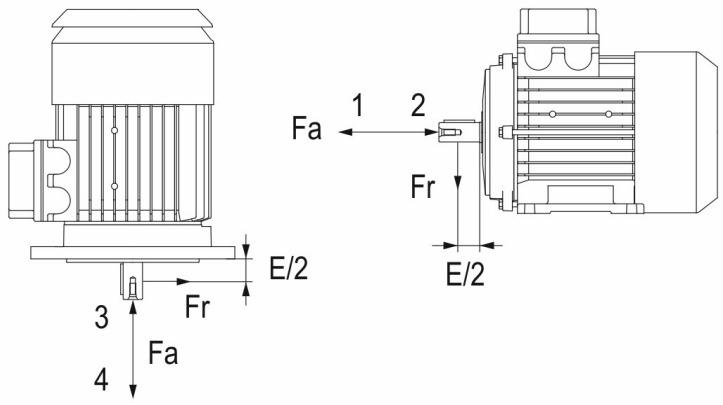

Maximum overhung load F_r [N] at 50Hz with $F_a/F_r<0.2$

	2 (p)	4 (p)	6 (p)	8 (p)
63	80	360	410	450
71	270	350	400	440
80	440	560	650	720
90S	480	610	700	770
90L	490	620	710	790
100	680	870	1000	1100
112	990	1260	1450	1600
132S	1350	1720	1980	2190
132M	1430	1830	2100	2320
160S	1500	2650	3000	3100

(p) Pole

The following table was obtained by taking into account a radial load F_R applied on shaft output end centre line and a negligible axial load F_A (F_A/F_R < 0,2), with bearing reliability rate of 98% and lifetime of 20000 operating hours.

In the case of belt/pulley coupling, the motor shaft is subject to an overhung load F_R which can be evaluated as follows:

$$F_R = \frac{19100 \cdot P_n \cdot K}{n \cdot D_P} \pm P_P \text{ [N]}$$

where:

P_n = Nominal motor power [kW];

P_P = pulley weight; the sign in the equation accounts for whether the weight is acting with or against the belt tension [N];

n = speed [rpm];

D_p = primitive diameter of pulley [m];

K = coefficient, generally between 2 and 3, depending on type of belt/pulley transmission (refer to transmission documentation).

1.4 DESIGN FEATURES

1.4.8 Axial load

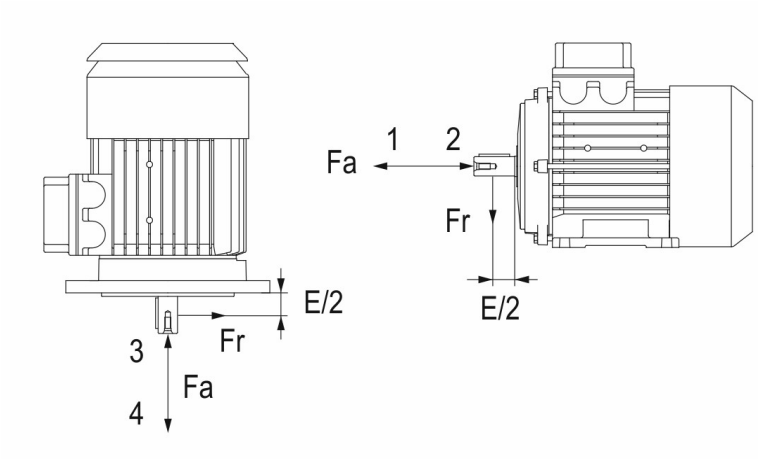

Maximum axial load F_a [N] at 50Hz with no overhung load F_r

	2 (p)				4 (p)				6 (p)				8 (p)			
	1	2	3	4	1	2	3	4	1	2	3	4	1	2	3	4
63	225	105	115	215	280	160	170	270	325	205	215	315	355	235	245	345
71	225	105	120	210	280	160	175	265	325	205	220	310	355	235	250	340
80	365	225	245	345	460	320	340	440	525	385	405	505	580	440	460	560
90S	390	210	235	365	495	315	340	470	565	385	410	540	620	440	465	595
90L	390	210	240	360	495	315	345	465	565	385	415	535	620	440	470	590
100	550	360	400	500	690	500	545	645	790	600	645	745	870	680	725	825
112	795	575	625	745	1000	780	830	950	1150	930	980	1100	1260	1040	1090	1210
132S	1145	765	845	1065	1445	1065	1145	1365	1650	1270	1350	1570	1820	1440	1520	1740
132M	1145	765	865	1045	1445	1065	1165	1345	1650	1270	1370	1550	1820	1440	1540	1720
160S	1145	765	865	1045	1445	1065	1165	1345	1650	1270	1370	1550	1820	1440	1540	1720

(p) Pole
IMPORTANT: In case of vertical installation with the shaft end uppermost, values 3 and 4 must be inverted.
No axial loads above $0{,}25C_0$ are allowed. The following table was obtained with no axial load, based on the type of installation and of the force application direction; the calculation made includes any possible unfavourable effect of the rotor weight and of the preload spring force.
For 60Hz operation, a reduction of approximately 7% of the values specified in the table must be considered.

1.5 MOUNTING POSITIONS

Mounting position: specific construction in relation to the mounting equipment, type of bearings and shaft end.
Installation type: positioning of the motor in relation to the axis line (horizontal or vertical) and mounting equipment.
The table lists the most common installation methods in relation to the mounting position.
With reference to standard IEC 34-7, the electric motor's nameplate must be marked with the mounting position (IMB3, IMB5, IMB14, IMB34, IMB35) independently of the installation type.

IMB3	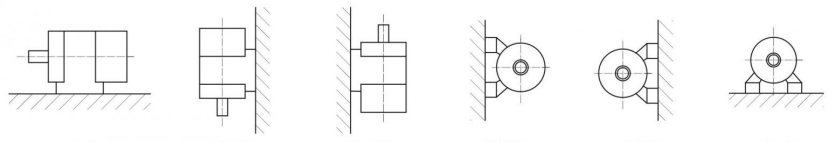
IMB5	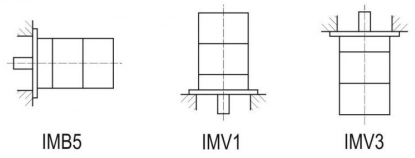
IMB14	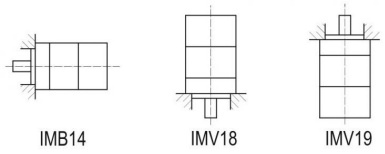
IMB35	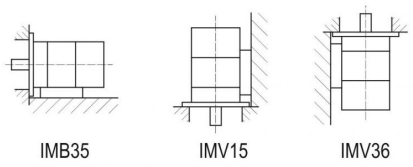
IMB34	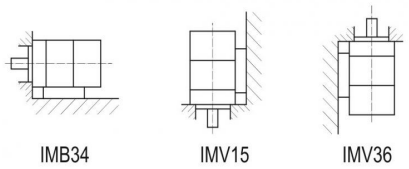

Mounting position:
- IMB3 with feet
- IMB5 with drive side flange, through holes
- IMB14 with drive side flange, threaded holes
- IMB35 with feet and drive side flange, through holes
- IMB34 with feet and drive side flange, threaded holes

Besides being available in the above-indicated standardised mounting positions, motors are available also in compact versions; this applies to both aluminium CHA and CBA gear reducers (B10 mounting position) and to cast iron CH, CB and CS gear reducers (B11 mounting position). These mounting positions require special flanges integral with the gear reducer and cable output shaft where pinion is fitted before the reduction stage. The resulting gearmotor has reduced axial size. For further details, including dimensional drawings, refer to the specific catalogues of the gear reducers.

1.6 PROTECTION RATINGS

Definition and applicability (IEC 60034-5):
The protection rating gives the protection provided by the enclosure in relation to:

- protection of persons against approaching or contact with live components;
- protection against ingress of solid foreign matter;
- protection against damage by water.

It does not account for protection against mechanical damage or special conditions, including humidity (for example, as caused by condensation), corrosive vapours, mould, insects or explosive atmospheres.
The code indicating the protection rating is composed of the letters IP followed by two characteristic digits which indicate conformity with the conditions indicated in the table.
The Motovario electric motors in standard operation have an IP55 degree of protection; optionals include executions with IP56, IP65 and IP66 degrees of protection .
The Motovario self-braking electric motors have an IP54 degree of protection; optionals include executions with IP55, IP56, IP65 and IP66 degrees of protection.
Motors with superior degree of protection of IP66 cannot be supplied.
Protection degree of the motors is guaranteed and certified by tests carried out in qualified testing room.

	The first digit indicates the degree of protection against ingress of solid matter and approach to or contact with live components
0	no protection
1	protection against ingress of solid bodies of diameter greater than 50mm. (e.g. involuntary contact with the hands)
2	protection against ingress of solid bodies of diameter greater than 12mm. (e.g. finger)
3	protection against ingress of solid bodies of diameter greater than 2.5mm
4	protection against ingress of solid bodies of diameter greater than 1mm
5	protection against ingress of dust; penetration by dust is not completely eliminated, but it may not enter in amounts sufficient to compromise the operation of the motor
6	total protection against ingress of dust

	The second digit indicates the degree of protection against ingress of water
0	no protection
1	drops of water falling vertically may not cause damage (e.g. condensation)
2	drops of water falling vertically may not cause damage when the machine is inclined at any angle up to 15° from its normal position
3	water fall- ing at an angle to the vertical of up to 60° may not cause damage
4	water sprayed onto the machine from any direction may not cause damage
5	water sprayed onto the machine with a nozzle from any direction may not cause damage
6	waves or jets of water may not penetrate into the machine in amounts sufficient to cause damage
7	water may not penetrate into the machine in amounts sufficient to cause damage when it is submerged in given conditions of pressure and duration
8	the motor may remain submerged perma- nently in water in the conditions indicated by the manufacturer

1.7 THERMAL CLASSIFICATION

1.7.1 Insulation classes

The thermal insulation system is classified by a single letter (IEC60085).
Depending on the thermal class, the winding overtemperature, which is the difference between their temperature and ambient temperature, has the maximum limit given in the table; the resistance variation method is used to measure the overtemperature.
To obtain the maximum absolute temperature admitted for the insulation system, a maximum ambient temperature of 40°C is used.
Standard electric motors are made with a winding insulation system in conformity with thermal classification F, in accordance with publication IEC60034-1; the thermal reserve, for standardised powers, is such that the over-temperatures of the windings do not exceed the limits set for class B; this ensures less strain on the insulation from a thermal point of view, therefore a longer service life for the motor.
Given the ambient installation conditions, constructions to class H are optionally available, for which the respective overtemperature is permitted.

1.7.2 Thermal class

	Thermal class			
MOT.		B	F	H
P_n < 600W	ΔT T_M	85 130	110 155	130 180
Pn >= 600W	ΔT T_M	80 130	105 155	125 180
IC410 / IEC 60034-7	ΔT T_M	85 130	110 155	130 180

P_n = Nominal power
IC410 / IEC 60034-7 = Motors without ventilation (IC410 for IEC34-7)
ΔT = Winding overtemperature in [K] measured with the resistance variation method
T_M = Maximum operating temperature of windings in [°C] at ambient temperature of 40°C

2.1 OPERATING CONDITIONS

2.1.1 STD ambient conditions – Derating for non-standard conditions

Standard electric motors are designed for the following operating conditions on-site:

- **Altitude:** no greater than 1000 m above sea level.
- **Ambient temperature:** minimum -15°C, maximum +40°C.

If the motors are destined to operate at places at a height of between 1000 and 4000m a.s.l., or if the ambient temperature is between +40 and +60°C, it is necessary to **apply** a corrective coefficient (see graph) to the motor power to allow the motor to maintain its thermal reserve (maximum temperature reached by the windings in normal operating conditions). **Alternatively, to select the right motor size it is recommended to account for such ambient conditions by dividing the application's power requirement by the same corrective coefficient.**
In some cases, power corrective coefficient cannot be applied, this mainly applies to high-efficiency motors (TH and TP); however it must be borne in mind that this reduces the motor's thermal reserve. In any case, the maximum winding temperature must be within the range given for the thermal class in question. For further details, contact our Technical Service.

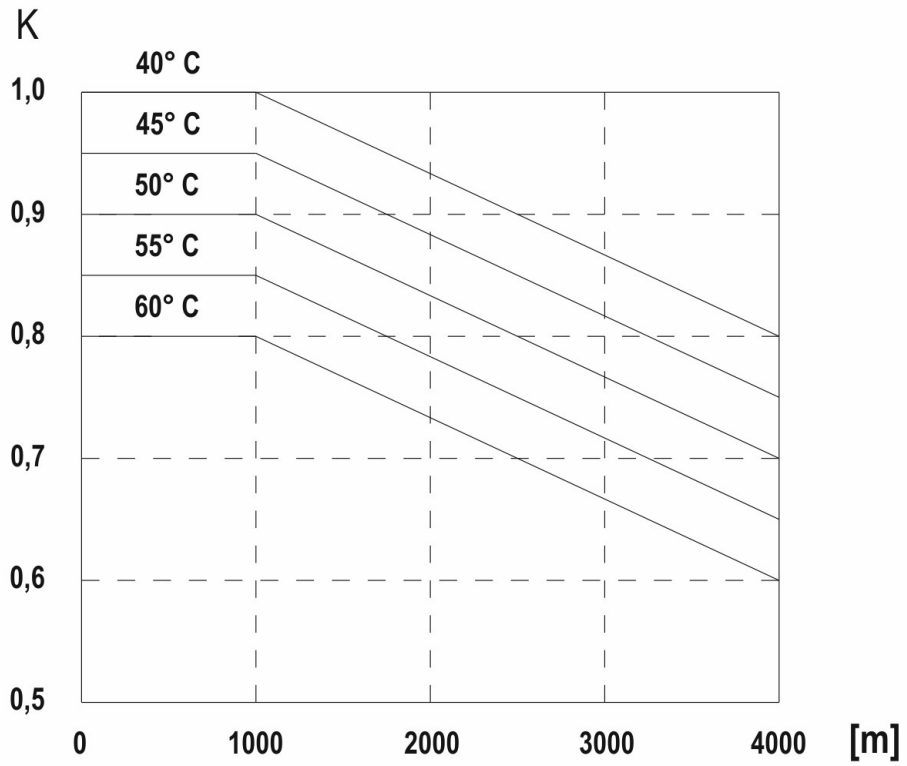

2.1.2 Options for particularly humid environments

The paint and the standard impregnation method adopted for insulation of the motor windings is also suitable in cases where there is a high humidity environment (tropical climates). In such case no additional treatment is required.
In the case of particular ambient conditions that may lead to the formation of condensation inside the motor, the following options are available:

1. *Condensation drain holes.* Holes for draining out condensation, normally closed with plastic plugs to provide the protection rating declared on the nameplate; periodically open the plugs to drain out the moisture and then close them again.
2. *Condensation heater.* Condensation heaters are electrical heating elements installed directly on the heads of the motor windings and, due to the particular nature of the impregnation process, connected to the latter. This prevents condensation forming even in extreme climatic conditions. The power cables are routed into the motor's terminal block enclosure and hooked up to a mammuth type terminal block. The heaters should not be powered while the motor is running.

Condensation heater technical data:

- insulation class: 180°C
- temperature range: -50 to +180°C
- dielectric rigidity: 2kV
- heating power:
    1. 12.5W (30W for UL/CSA homologated construction) for motor sizes 63 to 112
    2. 25W (50W for UL/CSA homologated construction) for motor sizes 132 and 160S
- operating voltage: 110V or 230V

Custom voltages and powers are available on request.
Condensation drain holes and condensation heaters can also be ordered as individual options.
With reference to the condensation heaters, with a DC power source, the same effect can be obtained by powering two phases of the motor with the motor off; the power voltage must be such as to provide the same heating effect as the condensation heater itself, as follows:

Vdc = √(P·R)

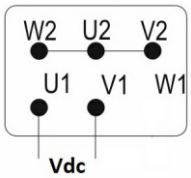

where:
P = heating power [W]
R = resistance between two phases measured across terminals U1 - V1

Options 1) and 2) are not available in conjunction with servo-ventilation and on the self-braking motors with ML brake; on self-braking motors with brake, FM and MS are only available with IP55 degree of protection.

2.1.3 Low temperature construction (-40°C / -15°C)

In case of applications with ambient temperature included between –40°C and –15°C, the electric motor is equipped with special components:

- Bearings with special lubrication (LHT) and higher backlash (C3) suitable for low running temperatures;
- Silicone oil seal;
- Aluminium fan;
- Metal cable glands and plugs.

In these conditions, if condensation formation is a risk, we recommend employing, or at least order the condensation drain holes and/or heaters. The low temperature construction is not available in combination with forced ventilation or for brake motors with ML or MS brake; brake motors with FM brakes have this option only with IP55 protection rating.

2.1.4 High temperature construction (+60°C / +90°C)

In case of applications with ambient temperature included between +60°C and +90°C, the electric motor is equipped with special components:

- Class H winding insulation
- Bearings with special lubrication (LHT) and higher backlash (C3) suitable for high running temperatures;
- Viton/FKM seal rings;
- Aluminium fan;
- Metal cable glands and plugs.

Furthermore, when selecting the product it is advisable to adopt power derating for +60°C ambient temperature (see “Standard ambient conditions – Derating for non-standard ambient temperature/ altitude”). The high temperature construction is not available in combination with forced ventilation or on brake motors.

2.2 ELECTRIC MOTORS EFFICIENCY

2.2.1 Standard high efficiency (TS), high (TH) and premium (TP) motors

Motovario, three-phase, single polarity motors are available in three different versions (IE1-IE2-IE3) in compliance with standard 60034-30-1 (see table). The efficiency value is calculated according to the method set forth in standard IEC 60034-2-1.

1. IE1: Standard efficiency TS series.
2. IE2: High efficiency TH series
3. IE3: Premium efficiency TP series. (*)

Table of Motovario commercial availability

		EFFICIENCY LEVEL		
NOMINAL POWER [kW]	POLES	IE1	IE2	IE3
0,09 ≤ Pn < 0,75	2 - 4 - 6	TS-TBS	-	-
0,75 ≤ Pn ≤ 11	2 - 4	TBS	-	-
0,75 ≤ Pn ≤ 5,5	6	TBS	TH-TBH	TP-TBP
0,75 ≤ Pn ≤ 9,2	2 - 4	-	TH-TBH	-
0,75 ≤ Pn ≤ 7,5	2 - 4	-	-	TP-TBP
7,5 ≤ Pn ≤ 22	6	TBS (*)	-	TP
11 ≤ Pn ≤ 90	4	-	-	TP
15 ≤ Pn ≤ 37	2	TBS (*)	-	TP
15 ≤ Pn ≤ 55	4	TBS (*)	-	-

(*) TP series motors have the same external dimensions as their counterparts in the TH series, with the following exceptions:
a) TP80B4 0.75 kW, TP90S4 1.1 kW, TP90L4 1.5 kW, TP112M4 4 kW, TP90S6 0.75 kW, TP112M6 2,2 kW with increased length compared to their counterparts in the TH and TS series (see dimensional tables);
b) 3 kW 4 poles, manufactured in size 112 IE3 instead of 100 IE2;
c) 5.5 kW 4 poles, manufactured in size 132M IE3 instead of 132S IE1;
d) 1.1 kW 6 poles, manufactured in size 100 IE3 instead of 90L IE1.
For further details, refer to the dimensional pages.
Motor TP100LA4 2,2 kW and all TP 6 poles motors are available at 60Hz only upon request. As a consequence, these motors are in IE3 efficiency level at 50 Hz and IE2 at 60 Hz in case of bifrequency electrical design (standard 230/400-265/460V 50-60Hz and optional 200/346-220/380V 50-60Hz, 290/500-330/575V 50-60Hz and 400/690-460/800V 50-60Hz, see chapter on input voltage and frequency).

2.2.2 EC Regulation No. 640/2009

The EC Regulation 640/2009 (EU MEPS – Minimum Energy Performance Standard) implements Directive 2005/32/EC with regard to ecodesign requirements, to improve energy saving. It applies on the European Union territory to the three-phase asynchronous electric motors having the following features:

- 2, 4 or 6 poles;
- Nominal power greater than or equal to 0.75 kW;
- Maximum nominal voltage 1000 V;
- Suited for continuous duty;
- Suited for operation in standard environments (ambient temperature -15°C to +60°C, altitude below 4000m asl);

These motors can be placed on the Community market for the first time according to the 3 following deadlines:

1. *June 16th 2011:* all motors must have a minimum IE2 efficiency level (TH series).
2. *January 1st 2015:* all motors must have a minimum IE3 efficiency level (TP series) if their nominal power is higher or equal to 7.5 kW. The IE2 efficiency level is allowed if the motor is powered by an inverter. In this case, the IE2 motor (Motovario TH series) bears a sticker with indication (*).
3. *January 1st 2017:* all motors must have a minimum IE3 efficiency level (TP series). The IE2 efficiency level is allowed if the motor is powered by an inverter. In this case, the IE2 motor (Motovario TH series) must bear a sticker with indication (*).

(*) IE2 | EU REGULATION 640/2009 USE WITH VARIABLE SPEED DRIVE ONLY!

This regulation explicitly excludes the following types of motors that, as a consequence, do not need to comply with any special efficiency requirement:

- self-braking motors;
- motors conforming with European Directive 94/9/EC (ATEX);
- motors for intermittent (S3) or limited duration (S2) duty.

The energy performance, and hence efficiency, of Motovario compact motors (incorporated with the gear reducer) can be tested independent of the gear reducer; in compliance with Regulation No. 640/2009, they are thus not an exception to motors with coupling according to the IEC standard.
We remind you that in other parts of the world (i.e. USA, Australia, South Korea, etc.) other energy regulations, with other provisions, apply. It is a good practice to collect detailed information about these regulations before placing an electric motor on these markets.

2.3 POWER CONDITIONS

2.3.1 Standard construction motor voltage and frequency

In the standard construction (Euro Voltage) the power voltages and frequencies permitted for motors are as follows:

1. For single polarity three-phase motors 230/400V 50Hz with 10% voltage tolerance;
2. For double polarity three-phase motors 400V 50Hz with 10% voltage tolerance;
3. For single-phase motors 230V 50Hz with 5% voltage tolerance.

Within the permitted voltage tolerance range the nominal motor ratings may differ slightly by an amount which generally depends on the motor size; no generally valid rules are available. As a first approximation, the data given in the table applies, where the values represent corrective coefficients for the catalogue and nameplate data.

	V_n -10%	V_n -5%	V_n	V_n +5%	V_n +10%
n	0,97	0,99	1	1,01	1,02
M_n	1,03	1,01	1	0,99	0,98
I_n	1,05	1,03	1	1,03	1,05
$\cos\varphi_n$	1,08	1,05	1	0,95	0,9
M_s/M_n	0,81	0,9	1	1,1	1,21

Normally, single polarity three-phase motors in the standard (Euro Voltage) construction have nameplate ratings of 230/400V 50Hz and 265/460V 60Hz. The nominal power for 60 Hz voltages is greater by 15-20% in TS series motors; and is equal to the nominal power at 50 Hz in TH and TP series motors. A tolerance of 10% is guaranteed for all four voltage/frequency values.

2.3.2 Standard electrical construction motors with ST2 option

A single polarity three-phase motor in the standard (Euro Voltage) construction may also be used with 60Hz grid power. In particular, if powered at 460V 60Hz it can deliver 15% to 20% more than the nominal power at 50 Hz (over-rated power) while maintaining the other catalogue ratings (to an approximation). In further detail, with 60 Hz power the nominal operational ratings vary in relation to the power voltage compared to their values at 50 Hz (catalogue ratings) by approximately the factors given in the following table.

V 50 Hz	V 60Hz	M_n	P_n	n_n	M_s	M_s/M_n
220/380 230/400 240/415	255/440 265/460 280/480	1,00	1,15-1,20	1,20	1,00	1,00
	220/380 230/400 240/415	0,83	1,00	1,20	0,70	0,83

Consequently, single polarity three-phase standard efficiency motors (TS series) for voltages 220/380V, 230/400V or 240/415V, frequency 60Hz and standard nominal power (second row in table above) are constructed with standard (Euro Voltage) winding; note however that some ratings will decrease (in particular, starting torque). If the performance is considered insufficient for the application, the said motors can be ordered with over-rated power which, since they are constructed with a custom winding, will guarantee the catalogue ratings (see next paragraph). For single polarity three-phase motors the voltages 220/380V±5% 50Hz and 240/415V±5% 50Hz are included in the interval 230/400V±10% 50Hz and are thus constructed with standard windings. These voltage/frequency ratings are declared on the nameplate if the motors are explicitly requested with such power supply specifications in the order. On request, motors can be supplied for which even these voltages have a declared tolerance of ±10%.

Single-phase standard (Euro Voltage) motors cannot generally be used on 60Hz power, but require a custom electrical design (modified winding and capacitor).

2.3 POWER CONDITIONS

2.3.3 Motors with non-standard power voltages (SP1 - optional)

As an option, single polarity three-phase motors can be provided for the optional voltages/frequencies indicated in the following table; in this case the winding is always non-standard. “S” indicates the nominal power at 50Hz, i.e. the catalogue rating (technical data table), while “M” indicates the overrated nominal power (15-20%) at 60Hz. TH and TP motors are not available at 60 Hz with over-rated power.

[Hz]	[V]	TS	TH/TP
50-60	200/346-220/380	S-M	S
	290/500-330/575	S-M	S
	400/690-460/800	S-M	S
50	115/200	S	S
	133/230	S	S
	208/360	S	S
	255/440	S	S
	380/660	S	S
	415/720	S	S
60	120/208	S, M	S
	200/346	S, M	S
	208/360	S, M	S
	230/400	M (1)	S
	240/415	M (1)	S
	330/575(2)	S	S
	346/600	S, M	S
	380/660	S, M	S
	400/690	S, M	S
	415/720	S, M	S

Notes:
The voltage pair 220/380 60Hz can be selected with over-rated power by selecting 4 voltages 200/346-220/380V, 50-60 Hz; the standard power selection is available with standard winding and option ST2 for the TS series, or optional winding for the TH and TP series.
TP series 6-pole motors are available at 60 Hz only upon request. When the voltage values are present on nameplate, usually at 60 Hz, these motors (TP with 6 poles) have a IE2 efficiency class.

1. Standard power at 50 Hz with standard winding and option ST2.
2. By selecting 4 voltages 290/500-330/575V 50-60Hz the over-rated power is available for TS series, and standard power for TH series and TP series.

The following table gives the detailed values of “S” and “M” for all nominal voltages listed in the catalogue.

	[kW]										
(S)	0,09	0,12	0,15	0,18	0,22	0,25	0,3	0,37	0,55	0,75	0,92
(M)	0,11	0,14	0,17	0,21	0,26	0,29	0,36	0,45	0,65	0,9	1

	[kW]										
(S)	1,1	1,5	1,85	2,2	3	4	4,8	5,5	7,5	9,2	11
(M)	1,3	1,8	2,1	2,6	3,6	4,7	5,7	6,5	9	10,5	13

High efficiency motors (TH series) and premium efficiency motors (TP series) for voltages 220/380V, 230/400V or 240/415V at 60 Hz are always made with a custom winding and are not available with over-rated power. Single-phase motors (S and HSE series) are available as an option with the following supply voltages: 230V 60Hz, 115V 60Hz, 230V 50Hz with balanced winding (see page 102). More voltages are available upon request. Normally, all single polarity three-

phase motors are fitted with a 6 terminal winding hooked up to a 6 clamp terminal block and are suited for D/Y connection. For the USA market, single polarity three-phase motors with UL/CSA homologation can be ordered for the voltage 230/460V 60Hz with 9 terminal winding hooked up to a 9 clamp terminal block for YY/Y connection. On request, motors suited for different power voltages than those indicated above are available. UL/CSA homologated motors do not declare voltages above 600V on their nameplates.

2.3.4 Inverter power supply

Standard asynchronous three-phase motors can be used in variable speed applications if powered by inverters, in observance of the general prescriptions for rotating electrical machines given in IEC 60034-1. This is possible thanks to the generous electromagnetic specification and effective insulation system, with an ample thermal and dielectric margin, such as to enable good response even in case of overloads and limited frequency applications. All three-phase motors are also equipped with phase separators to ensure resistance of the insulation to the voltage peaks generated by inverter power supply. Applications with an extremely high or low speed may require the use of forced ventilation, on the one hand to improve cooling as it is insufficient, on the other hand to eliminate the noise caused by selfventilation and to decrease the load caused by the flow rate of the air produced by the fan, that becomes quite considerable at high speeds. Of course, the operating limits of the servo-fan are strictly connected with the conditions of load (duration and quantity); for S1 duty, please refer to the indications given in the operation diagram below. Applications at speeds above 3600rpm must be discussed with our technical service. Note that Motovario also produces the DRIVON vectorial inverter drive. For further information, consult the respective catalogue. In use, asynchronous electric motors with inverter power supply have two operating ranges:

Constant torque (magnetic flux) range: constant V/f ratio.
(400/50 for motor with 230/400V 50Hz star winding connection or 400/690V 50Hz Δ winding connection and three-phase inverter, 230/50 for 230/400V 50Hz Δ winding connection and single- or three-phase inverter). This range allows the motor to run at nominal torque down to a lower limit (approximately 30 Hz for self-ventilated motors in S1 continuous duty and 2 Hz for S3 intermittent or S2 limited duration duty, or with forced ventilation motor in S1 continuous duty), below which the torque is derated as shown in the graph; the low frequency torque curve is nonetheless dependent on the inverter settings (e.g. voltage boost function); in the case of a vectorial inverter (e.g. the DRIVON), the motor's nominal torque can be guaranteed down a few Hz, and even in S1 duty if the motor is of the forced ventilation type. Under these conditions, the best performance can be achieved through the integrated autotuning function, allowing inverter automatic setting by adapting it to the parameters of the equivalent circuit of the electric motor, thus optimizing its performance. In the case of a 230/400V 50Hz winding motor powered by a three-phase inverter, the motor can also be connected in Δ; in these conditions the magnetic flux in the motor remains almost constant up to 87Hz, and the constant torque range can thus be extended up to that frequency, obviously if the inverter can deliver the current required by the Δ winding motor. Operation at constant V/f but at torques greater than nominal, even overloading the motor, are admitted, so far as they are compatible with the inverter's current limit and the duty time.
N.B.: On request, motors can be supplied with special windings to adapt the constant torque speed range to the client's actual application.

Constant voltage operating range (value set by power mains).
In this range, where the voltage reaches the maximum possible value (mains voltage), an increase in the speed and hence frequency decreases the V/f ratio and hence the magnetic flux (defluxing operation); there is also a drop off in torque with constant power delivery up to around 80-90Hz; beyond this limit (the "limit frequency") torque and power both fall off as the frequency rises. For motor operation with constant torque up to 87Hz, the line of the power remains constant for values above 100Hz. The limit frequency fL can be determined as follows:
fL = fn Mmax/Mn
where fn and Mn are the nominal frequency (e.g. 50Hz) and nominal torque respectively, and Mmax is the maximum torque. The value of Mmax/Mn is given on the performance data page.

2.3 POWER CONDITIONS

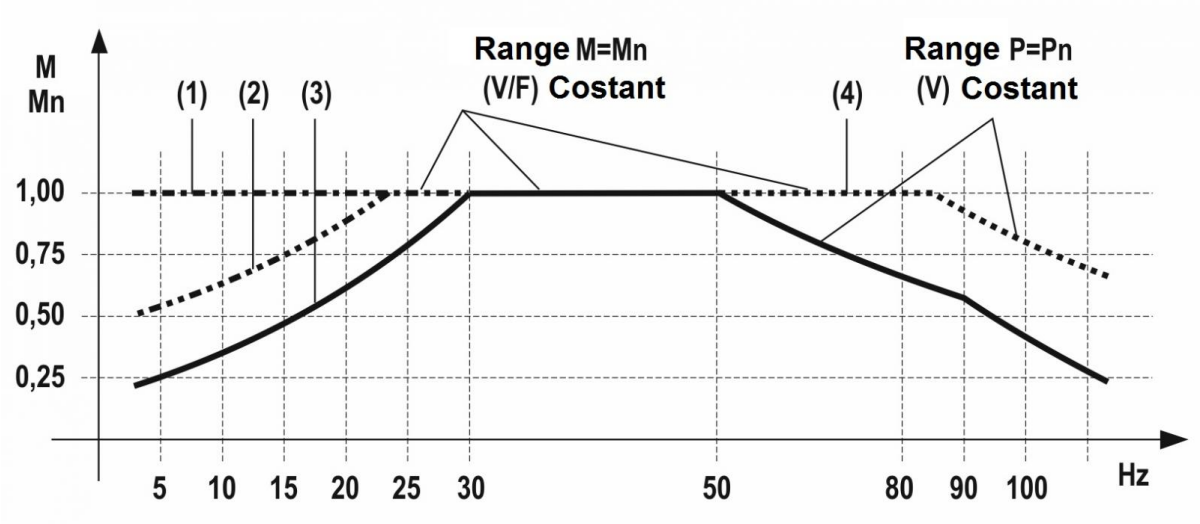

(1) Torque limit with vectorial inverter (e.g. DRIVON) in S1 duty and forced ventilation motor (IC416), or S2 or S3 duty with self-ventilated motor (IC411).
(2) Torque limit with scalar V/f inverter in S1 duty and forced ventilation motor (IC416), or S2 or S3 duty with self-ventilated motor (IC411).
(3) Torque limit with vectorial inverter (e.g. DRIVON) in S1 duty and self-ventilated motor (IC411).
(4) Extension of torque limit with three-phase inverter (e.g. DRIVON and delta winding connection.

2.4 SOUND PRESSURE LEVEL

The table gives the normal mean sound pressure level L_{pA} [dB(A)] for three-phase motors running under no load, power frequency 50Hz, with measurement per ISO R 1680; tolerance +3db(A). At 60Hz the values are increased by around 2dB(A). The values are measured in a semi-anechoic chamber at 1 m from the housing of the motor located in a free field and on a reflecting plane. The measurements were made with standard motors in closed constructions with external surface ventilation (method IC411 per IEC 60034-6).

	L_{pA} [dB(A)]			
	2 (*)	4 (*)	6 (*)	8 (*)
63	56	46	47	44
71	61	48	47	45
80	64	54	52	50
90	65	55	53	51
100	69	57	56	53
112	70	58	56	53
132	76	60	58	56

(*) Poles

2.5 DUTY

"Duty" is defined as being the load condition the machine is subject to, including (if applicable) the periods of starting, electrical braking, operating with no load, and rest, as well as their duration and sequence in time. Duty can be described as one of the following standard types, in line with IEC 60034-1, or by another type identified by the user with a graph to show the sequence over time of the variable duty parameters;if the sequence is not defined, a nominal sequence must be selected which is no less severe than the actual sequence, conforming to one of the predefined duty types; if the duty is not specified, S1 is deemed applicable. The values given in the catalogue tables refer to electric motors, totally enclosed, with fan-cooled external surface ventilation, for which in nominal operating conditions, taking account of the insulation class, the S1 duty is applied. The type of duty is given on the motor name plate. In case of non-continuous duty three-phase standard construction motors (duty S1) may be overloaded as indicated in the table.

Duty		Power over-rating factor
S2	60min.	1,1
	30min.	1,2
	10min.	1,4
S3	60%	1,1
	40%	1,15
	25%	1,25
	15%	1,35
Other	-	Contact our technical service

S1 continuous duty
Operation at constant load of sufficient duration to achieve thermal equilibrium; for it to be applicable the user must precisely specify the load and nominal operating conditions in which the machine is to run for an unlimited period.

S2 limited duration duty
Constant load operation for a limited period of time, less than that required to achieve thermal equilibrium, followed by a period of standby sufficient to cool the machine down to the coolant fluid temperature, with a tolerance of 2°C. This duty is abbreviated as S2 followed by an indication of the running time; the user must precisely specify the load, running time and nominal operating conditions in which the machine, started at ambient temperature, may operate for a limited period. If the load is not specified, nominal load is assumed.
Sample designation: S2 30 min.

S3 periodic intermittent duty
Sequence of identical cycles, each including a period of operation at constant load and a period of standby; in this duty the cycle is such that the starting current does not significantly affect the overtemperature. The duty is designated S3 followed by the intermittency ratio; the cycle duration used to calculate the intermittency ratio is 10 minutes. The user must precisely specify the load and nominal operating conditions in which the machine is to run for a periodic cycle.
Sample designation: S3 25%.

S4 periodic intermittent duty with starting
Sequence of identical cycles, each including a non-negligible starting phase, period of operation at constant load and period of standby. The duty is designated S4 followed by the intermittency ratio, the motor moment of inertia J_T and load moment of inertia J_L, referred to the motor shaft. The user must precisely specify the load and nominal operating conditions in which the machine is to run for a periodic cycle.
Sample designation: S4 25% J_T=0.15kgm^2 J_L=0.7kgm^2

S5 periodic intermittent duty with electric braking
Sequence of identical cycles, each including a starting phase, period of operation at constant load, period of rapid electric braking and period of standby. The duty is designated S5 followed by the intermittency ratio, the motor moment of inertia J_T and load moment of inertia J_L, referred to the motor shaft. The user must precisely specify the load and nominal operating conditions in which the machine is to run for a periodic cycle.
Sample designation: S5 25% J_T=0.15kgm^2 J_L=0.7kgm^2

S6 periodic uninterrupted duty with intermittent load
Sequence of identical cycles, each including a period of operation at constant load and period of operation under no load; there is no period of standby. The duty is designated S6 followed by the intermittency ratio; the cycle duration used to calculate the intermittency ratio is 10 minutes. The user must precisely specify the load and nominal operating conditions in which the machine is to run for a periodic cycle.
Sample designation: S6 40%

S7 periodic uninterrupted duty with electric braking

2.5 DUTY

Sequence of identical cycles, each including a starting phase, period of operation at constant load and period of electric braking; there is no period of standby. The duty is designated S7 followed by the motor moment of inertia J_T and load moment of inertia J_L, referred to the motor shaft. The user must precisely specify the load and nominal operating conditions in which the machine is to run for a periodic cycle.

Sample designation: S7 J_T=0.15kgm^2 J_L=0.7kgm^2

S8 periodic uninterrupted duty with correlated variations of load and speed

Sequence of identical cycles, each including a period of operation at constant load at a preset constant speed, followed by one or more periods of operation at other constant loads at other speeds (done by changing the number of poles, for instance); no standby period exists. The duty is abbreviated as S8 followed by he motor moment of inertia J_T and load moment of inertia J_L, referred to the engine shaft, the loads, speeds and intermittency ratios for each period of operation at a given speed. The user must precisely specify the load and nominal operating conditions in which the machine is to run for a periodic cycle. Sample designation:

S8 J_T=0.15kgm^2 J_L=0.7kgm^2 (1.5KW-740rpm-30%) (2KW-1460rpm-30%) (1.1KW-980rpm-40%).

S9 duty with non-periodic variations of load and speed

Duty in which the load and speed generally vary in a non-periodic manner within the allowable range; this duty includes frequent overloads which may largely exceed the full load values; for this type of duty one must consider suitable full load values as a reference for the overloads. The duty is designated S9; the user must give precise details of the loads, speed and other conditions, including overloads, in which the machine is to operate non-periodically.

2.5 DUTY

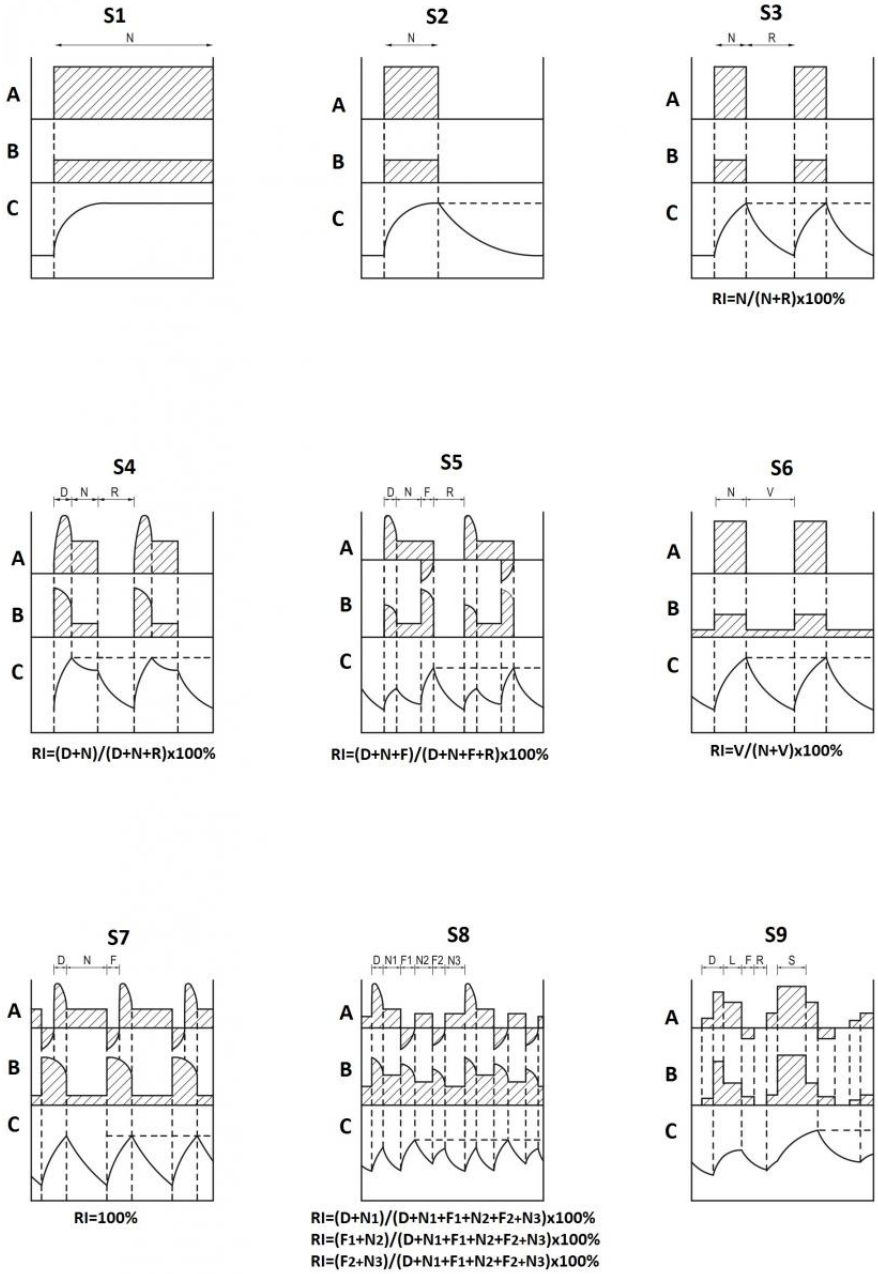

A	Load
B	Electrical losses
C	Temperature
D	Starting or acceleration time
N	Constant load running time
F	Electric braking time
R	Standby time
RI	Intermittency ratio
V	No load running time
Θ_{max}	Maximum temperature reached during cycle

2.6 OPTIONAL PROTECTION EQUIPMENT

2.6.1 Bimetal thermal cutouts

A bimetal thermal cutout is simply an NC bimetal contact which, at its trip temperature, switches from closed to open. It is normally used as a sensor to control a contactor which shuts off power. In this way the cutout guarantees quick circuit breaking without the maximum allowed winding temperature being exceeded, in relation to the motor insulation class per IEC60034-1. Thermal cutouts are normally positioned in close contact with the conductors inside the winding heads, before they are formed and impregnated. Normally in the three-phase motors three thermoprotectors in series are used (one for each phase). In single-phase motors there is only one thermoprotector. Thermoprotector terminals are available free within the terminal box; upon request their wiring is possible to a set of pins of the motor terminal block. Upon request it is possible to provide thermoprotectors that are normally open (NO), with the principle of operation inverse to that described.

Technical characteristics of standard bimetal thermal cutouts:

- Type NC;
- Trip temperature 130°C for class F insulation motors, 140°C for class F insulation motors homologated to the UL/CSA standards, 150°C for class H motors. Trip temperature tolerance ±5°C;
- Insulation dielectrical rigidity 2KV;
- Conformity with standard IEC60034-11.

Different trip temperatures are available on request, from 70 to 180°C.

Operation with NC contact

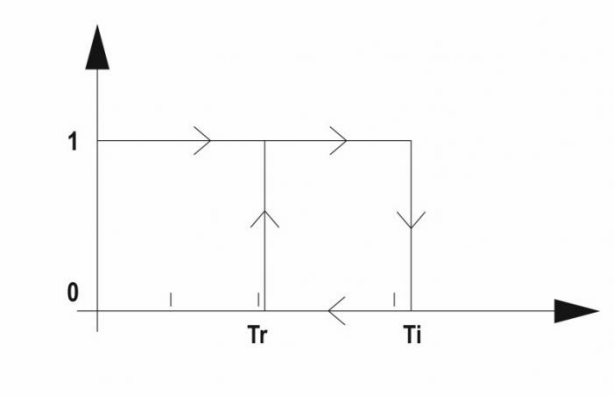

Operation with NO contact

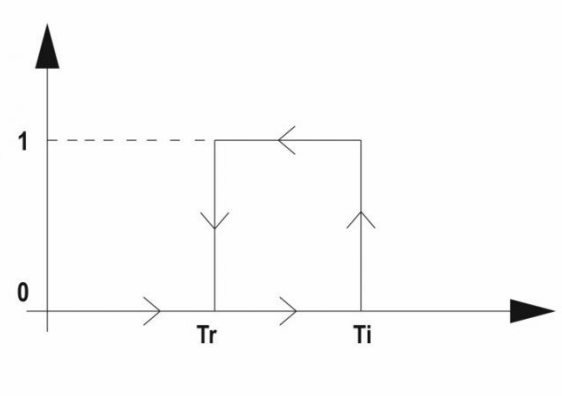

T_I	Trip temperature
$T_r = T_I$-30°C	Rearm temperature

2.6 OPTIONAL PROTECTION EQUIPMENT

2.6.2 Thermistors (PTC)

Thermistors are temperature sensors with high temperature sensitivity. Thermistors with positive temperature coefficient (PTC) are generally used, whose resistance rises drastically in the vicinity of the trip temperature. Their use is similar to that of bimetallic thermal fuses, the resistance value can thus be used by a release device (not supplied by Motovario) protecting the motor. Thermistor terminals are free inside the terminal block box; their wiring to special pins of motor terminal board is available upon request.

TEMPERATURE – RESISTANCE DIAGRAM

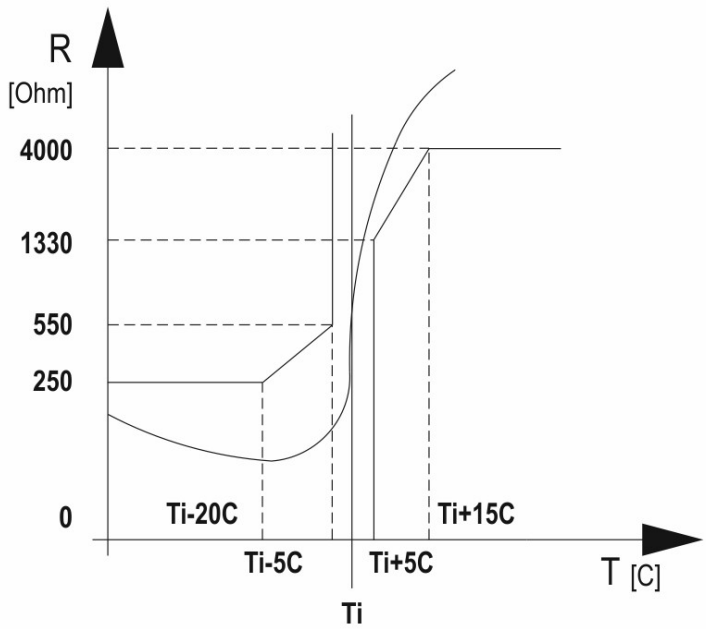

Technical characteristics of standard thermistors:

- Trip temperature 130°C for class F motors, also valid for UL/CSA homologation; 150°C for class H motors;
- Insulation dielectrical rigidity 2.5KV.

Different trip temperatures are available on request, from 60 to 180°C.

2.7 COOLING SYSTEMS

2.7.1 Cooling systems

Standard construction electric motors are closed and self-ventilated with a fan mounted to the motor shaft which operates in both directions of rotation. This cooling system, per IEC 60034-6, is designated IC411. Standard construction electric motors are constructed so that with IC411 cooling, duty is S1; this duty is guaranteed if the fan cover intake grille is not blocked by dirt deposited during operation or due to the installation itself (for example, inside the frame of a machine); such situations of poor ventilation must be carefully analysed to avoid compromising the motor's performance. If the cooling system is IC418 (e.g. motor driving a fan and cooled by the resulting current of air), standard motors can be used in non-ventilated construction and S1 duty; naturally the speed and flow of air must be at least equivalent to that of the IC411 system. In case of total lack of external surface ventilation (IC410) standard motors may be used only for limited duration or very periodic duty. In such conditions the standard duty is S2 10 min or S3 10%. On request, motors can be provided without ventilation for S1 duty; the power, for a given motor size, is reduced to around 1/3 of the power available in S1 duty for IC411 motors. Contact our technical service for further information.

IC411	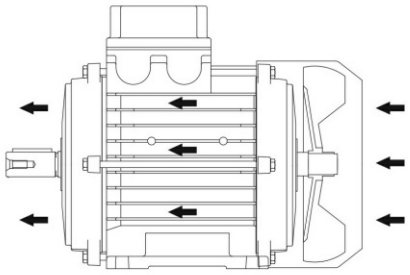
IC410	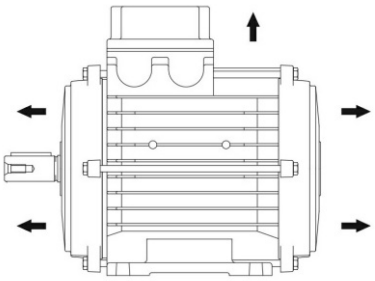
IC418	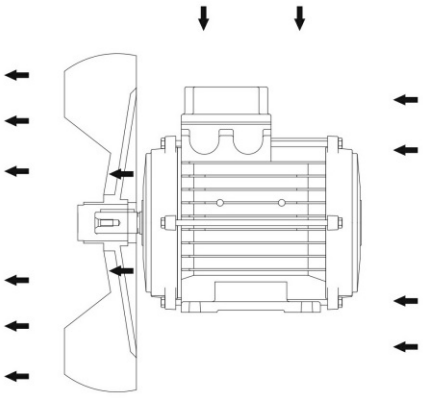

2.7 COOLING SYSTEMS

2.7.2 Forced ventilation

In the case of applications of the variable speed motor, it may be necessary to resort to forced ventilation (cooling method IC416), obtained by means of an axial flow servo-fan whose air flow rate is independent of the speed of rotation of the drive shaft. The supply, independent from the electric motor, is given by means of a connector applied directly on fan cover (single phase version 230V 50-60Hz, sizes 63-90), or by means of a separate terminal box cover applied on fan cover (single-phase 230V 50-60Hz sizes 100-132/160S and three-phase 380/420-380/480V 50-60Hz sizes 100-132/160S). On request, we can analyse different solutions, or for special power voltages. Use of the servo-fan is recommended for motor speeds much lower than the nominal speed, when the air flow rate of the standard fan would be insufficient for correct cooling, and for much higher speeds than the nominal speed, when the losses due to ventilation of the standard fan would no longer be negligible compared to the nominal load and also the noise of ventilation would be annoying. Forced ventilation could be necessary in case of frequent starting torques, as this condition entails a high heating and a low heat dissipation by the fan fitted on motor shaft. The speed limit which determines the need for forced ventilation depends on the load conditions to which the electric motor is subjected, in relation to the speed and duty type. Forced ventilation has been designed as a kit; therefore it is possible to modify a standard selfventilated electric motor (IC411) into a motor with forced ventilation (IC416) by following these simple instructions:

- disassemble the standard fan cover, unscrewing the fastening screws from the motor casing;
- remove the fastening bush of the plastic fan and remove the fan with the help of a tool;
- assemble the forced ventilation kit by tightening to the motor casing with the fastening screws of the fan cover just disassembled.

On request it is possible to supply forced ventilated motors with forced ventilation supply directly from the terminal box of the motor; in this case the forced ventilated unit cannot be supplied as a kit, but it should be ordered together with the complete motor. The application of the forced ventilation kit determines a length variation of the motor (see dimensional tables). Forced ventilation is not available for protection ratings higher than IP55 or in combination with high or low temperature.

IC416

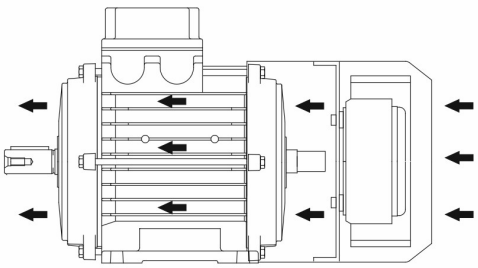

	[V] / [Hz]	[W]	[A]
63	230V/50-60Hz	14-16	0,09-0,11
71	230V/50-60Hz	14-16	0,09-0,11
80	230V/50-60Hz	33-36	0,20-0,24
90	230V/50-60Hz	33-36	0,20-0,24
100	230V/50-60Hz	33-36	0,20-0,24
112	230V/50-60Hz	76-90	0,35-0,40
132-160S	230V/50-60Hz	76-90	0,35-0,40
100	380-420V/50Hz 380-480V/60Hz	55-60	0,21-0,20
112	380-420V/50Hz 380-480V/60Hz	55-60	0,21-0,20
132-160S	380-420V/50Hz 380-480V/60Hz	55-60	0,21-0,20

2.7 COOLING SYSTEMS

Single-phase power sizes 63-71-80-90

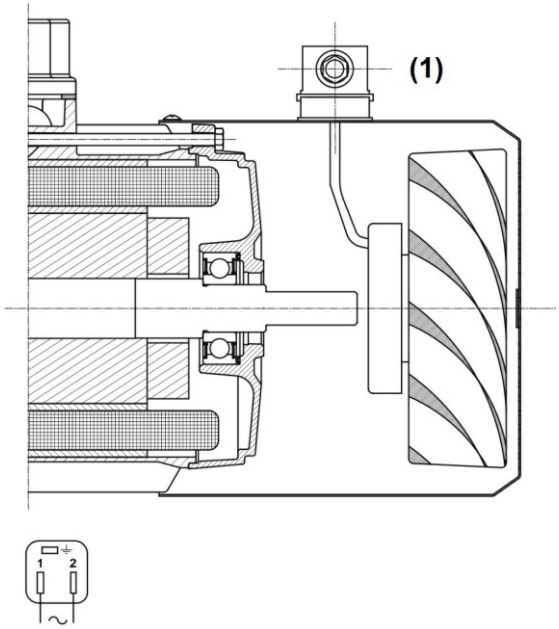

Single- and three-phase power sizes 100-112-132

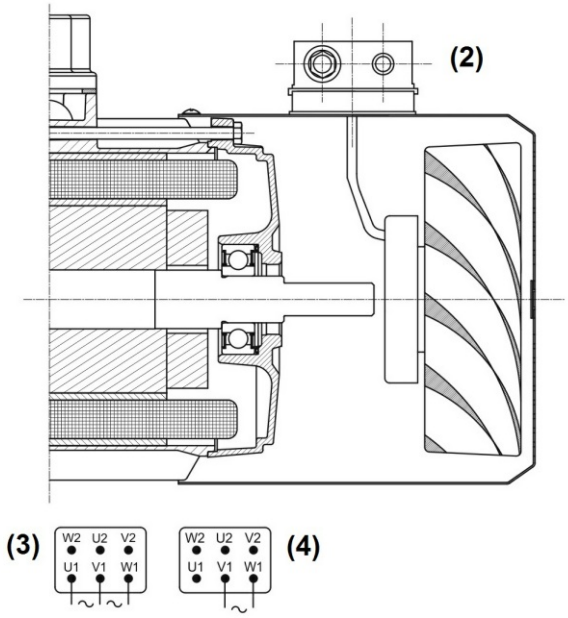

1. Connector mPm B202000N2 DIN 43650-A/ISO 4400
2. Cable gland M16x1.5 – Cable entry diameter 5-10 mm
3. Three-phase power 400V
4. Single-phase power 230V

2.8 OTHER OPTIONAL CONSTRUCTIONS

2.8.1 Version with roof

In the case of positioning the motor vertically in outdoor applications, with the end of the shaft on the driving side facing downwards, it is recommended to use a fan guard with a roof to shelter it from the rain. This version is generally recommended in all cases where entry of water or solid bodies is such as to jeopardise the correct operation of the motor, due to infiltration of water, partial blockage of the air grille, or an obstruction preventing the fan and the shaft from turning correctly. The roof not only protects against rain, but may be supplied for use in the textile industry; in this case the fan cover has the same roof as the rain cover, but without grille, to prevent blocking by textile processing fragments. The cover does not significantly alter the winding overtemperature. The application of the cover determines a height variation of the motor (see dimensional specifications). The presence of the roof is incompatible with the double extension shaft and/or with the recessed rear hexagon.

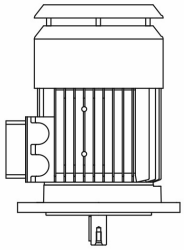

2.8.2 Backstop device

In applications where reverse motor rotation must be prevented, caused by the dragging action of the load, it is possible to have a backstop device applied directly on the motor on the fan side. This device is composed of eccentric cams with single spring guided by an inner and outer cage, themselves incorporated into two cylindrical tracks. When the inner track rotates with the motor shaft, the cams lift off the track due to the centrifugal force, thus allowing the shaft to rotate freely in the direction of rotation of the motor; when the shaft is rotated in the opposite direction, the cams lock down and prevent the shaft rotating. In consideration of the high speed of rotation, it is not recommended to use this device on 2 pole motors. For correct assembly of the backstop device, the direction of rotation of the motor must be specified in the order; a sticker on the fan cover shows the allowed direction of rotation. The backstop device, sized so as to be able to withstand the maximum torque transmitted by the motor and to work at the nominal speed of rotation of the motor without excessive wear, is lubricated for life with specific grease. The device's construction is such as not to increase the axial length of standard motors. The backstop device is not available for sizes 63 and 71.

1. **Outer track**
2. **Inner track**
3. **Backstop device**

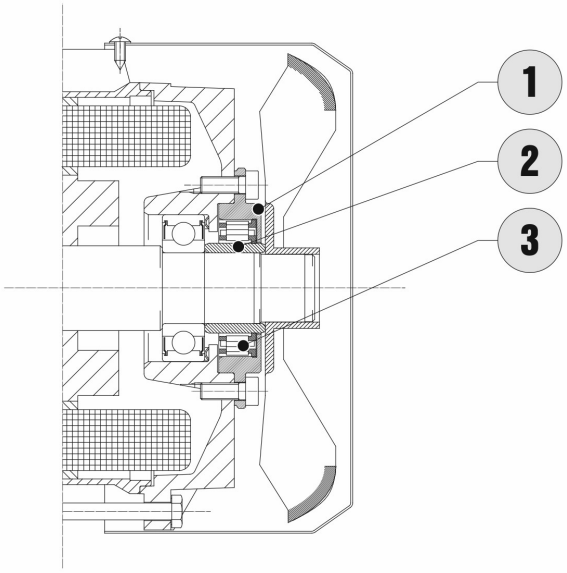

2.8 OTHER OPTIONAL CONSTRUCTIONS

2.8.3 Rapid connection power supply

It is possible to supply motors with incorporated connector, for quick and safe power cable hookup. The connector has a modular structure, therefore it is possible to adapt the voltage values and the current capacities according to the motor type where the connector is applied. The motor is connected with fixed part (A) incorporated into the terminal block box and connections cabled directly to the connector and a piggyback part (B) supplied hooked on to the fixed part. As far as the application is concerned following solutions are suggested:

- 10 pole connector for three-phase motor in standard version (TS, TH, TP and D versions) or brake versions (series TBS, TBH, TBP and DB) with or without thermal cutout, excluding AC brake and separate supply. For the three-phase motors it is possible to prearrange the detachable part with double connection in order to do the star-delta connection;
- 10 pole connector for single-phase motor in standard version (S series) or self-braking version (SB series, upon request) with or without thermal protector;
- 5 pole connector for single-phase motor (series S) with or without thermal cutout. With thermal cutout version it is necessary to know the direction of rotation beforehand.

Rapid connection power supply is available for motors up to nominal power 4 kW and sizes 112 inclusive. Brake motors (TBS, TBH, TBP and DB series) with Hartling connection are only available with a protection level IP54. Higher protection levels can be confirmed on request.

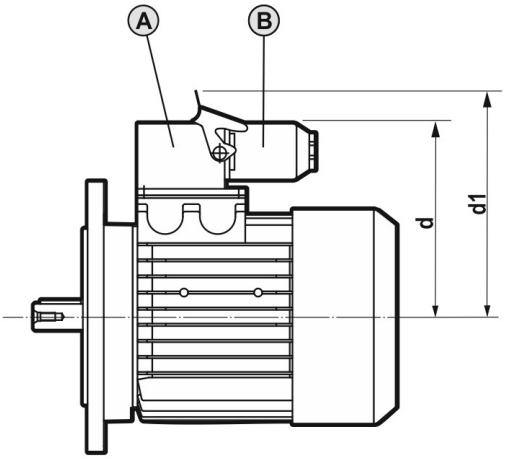

	5 (*)		10 (**)	
	d [mm]	d1 [mm]	d [mm]	d1 [mm]
63	96	120	122	160
71	108	132	134	172
80	119	143	145	183
90	127	151	157	195
100	136	160	166	204
112	-	-	181	219

(*) 5 pole connector (**) 10 pole connector

2.8 OTHER OPTIONAL CONSTRUCTIONS

Series TS-TH-TP-D-TBS-TBH-TBP-DB (except for separate power AC brake)	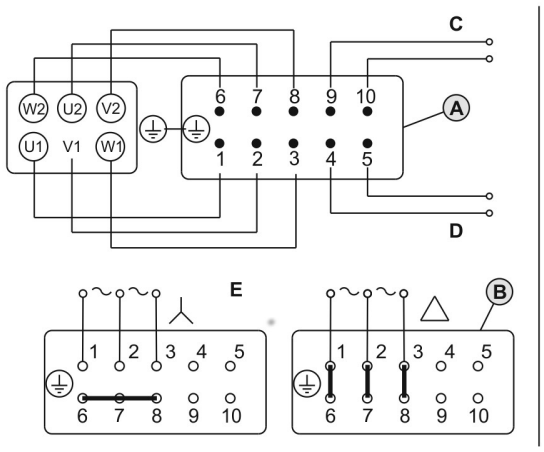
Series S (SB On request)	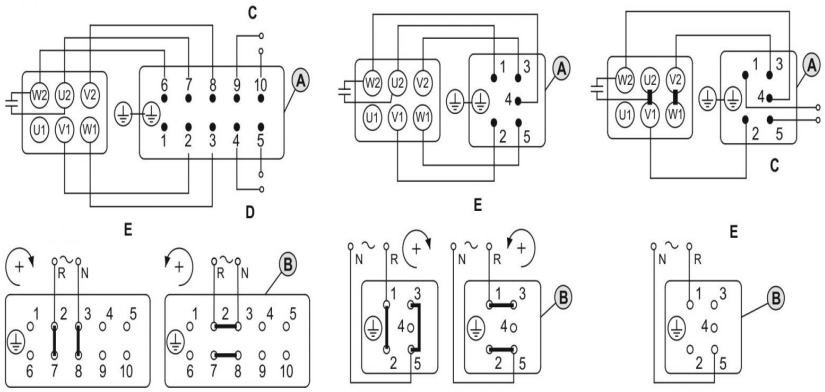

C - Temperature sensor
D - Separate power DC brake
E - Motor power supply

2.8.4 Incremental encoder

Incremental encoders are used when the motor speed must be known with precision, for example when used as a feedback signal for an inverter or indirect angular position signal or speed signal for a component of the machine to which the motor is coupled. Motovario supplies two distinct incremental encoder solutions.

1. **Standard incremental encoder**

The encoder, available in the version with hollow through shaft, is mounted by locking the rotor directly onto the motor shaft, while its fixed part (stator) is held in place by locking pawl secured to the motor shield or directly to the brake; the pawl is then fitted into a slot in the encoder's reaction arm which has a certain axial elasticity to compensate for play and dampen vibrations. It can be supplied in the following versions:

- Three-phase motor (TS, TH and D series) and three-phase brake motor (TBS, TBH and DB series) with FM and MS brakes;
- Non-ventilated (IC410), self-ventilated (IC411), forced ventilation (IC416).

We give below the various constructions with standard incremental encoder without connector in the case of motor:

- Fig.A - three-phase (TS, TH, TP and D) without ventilation (IC410);
- Fig.B - three-phase (TS, TH, TP and D) self-ventilated (IC411);
- Fig.C - three-phase (TS, TH, TP and D) forced ventilation (IC416);
- Fig.D - three-phase brake (TBS, TBH, TBP and DB - MS and FM brake) without ventilation (IC410);
- Fig.E - three-phase brake (TBS, TBH, TBP and DB - MS and FM brake) self-ventilated (IC410);
- Fig.F - three-phase brake (TBS, TBH, TBP and DB - MS and FM brake) forced ventilation (IC410).

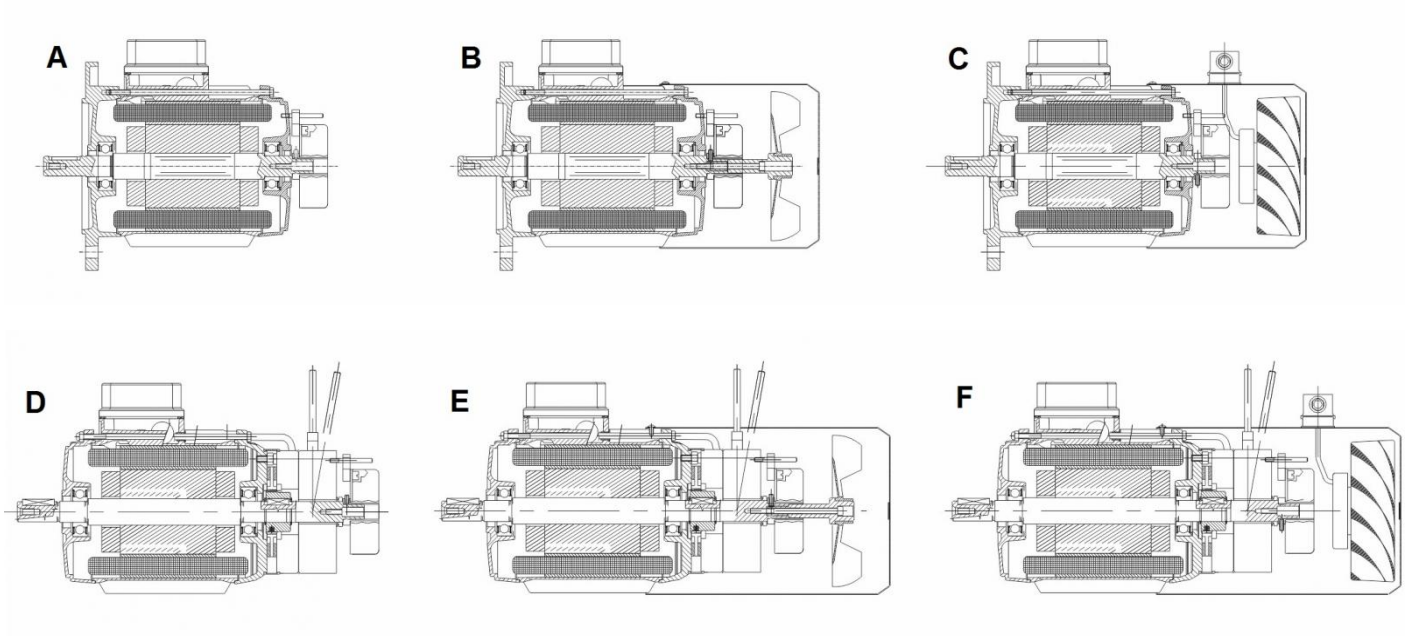

Mounting the standard incremental encoder changes the overall external dimensions of the motor (see dimensional tables).

Technical characteristics:

- standard resolution: 1024 pulse/cycle;
- Push-Pull (HTL) with 10-32 V power or Line Driver (TTL) with 5 V power;
- version without connector (free cable 0.5 m);
- version (optional) with male connector M23 12 pin cabled at the end of the wire 0.5 m; female connector supplied
- protection rating equal to that of the motor up to IP65;
- maximum speed: 9000 rpm;
- operating temperature: -30°C / +100°C;
- maximum current absorption under load: 30 mA;
- maximum current absorption under no load: 40 mA;
- maximum operating frequency: 300kHz.

On request, incremental encoders can be provided with any logic (HTL or TTL) and pulse/cycle resolution (1 to 65536) desired.

2.8 OTHER OPTIONAL CONSTRUCTIONS

2. **Low resolution incremental encoder**

Motovario low resolution incremental encoders are available on three-phase motors in the sizes 63-71-80-90, in brake and brakeless versions. On request, they can also be mounted to three-phase motors in the sizes 100-112-132/160S. They are composed of an encoder board to read the speed and a magnetic stainless steel phonic wheel. The board uses two Hall effect sensors to read the fins of the phonic wheel mounted to the motor shaft (see diagram). The 2 output signals are dephased by 90° to determine the direction of rotation. The logic is of the NPN type. Mounting a low resolution incremental encoder does not affect the overall external dimensions of the motor.

Technical characteristics:

- standard resolution: 13 pulses/cycle for size 63, 15 pulses/cycle for sizes 71-80-90;
- NPN version with 10-30 V power; PNP and Push-Pull versions available on request;
- version without connector (free cable 1.2 m);
- protection rating equal to that of the motor up to IP65;
- operating temperature: -40°C / +90°C;
- maximum current absorption under load: 25 mA;
- maximum operating frequency: 12.6 kHz.

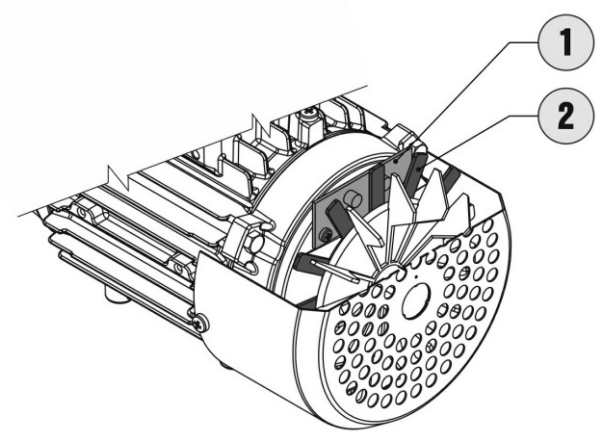

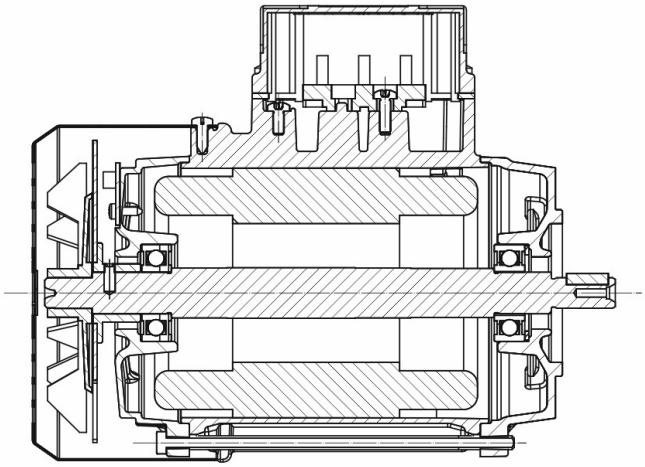

1. Encoder board
2. Phonic wheel

2.9 SERIES AND HOOKUP

2.9.1 Direction of rotation - Hookup

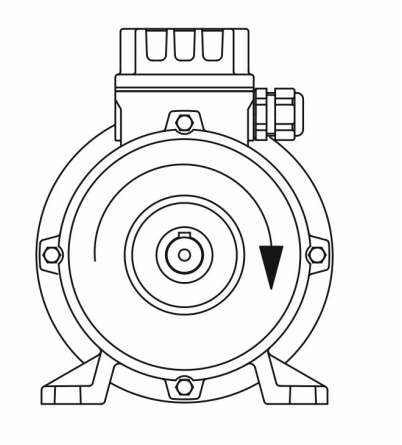

The connections on the terminal board and the direction of rotation are made in conformity with the requirements of the standard IEC60034-8. The direction of rotation, by definition, is the direction when viewing the motor from the coupling side (see figure). All standard motors are suitable for operation in both directions of rotation; clockwise is the default direction. The tables with the connections on the terminal board are inside the terminal board cover. If the motor needs to operate anticlockwise, ie. the opposite direction to the standard supply, it is necessary to proceed as follows:

- In the case of three-phase motors, by swapping over two supply phases;
- In the case of single-phase motors, by changing the connections on the terminal board as shown on the wiring diagrams.

In both cases it is prohibited to alter the internal connections of the motor to its terminals on the terminal board, they must remain unchanged. If the motor needs to be fitted for just one direction of rotation (e.g. with backstop device), this direction is shown with an arrow on the fan cover or in another clearly visible position.

2.9.2 TS-TH and TP series

The technical data given in the tables in the catalogue refer to standard three-phase asynchronous motors insulated in class F and in continuous duty S1, supplied at the nominal voltage of 400V and nominal frequency 50Hz. The connection types are marked inside the terminal block cover. The conventional direction of rotation (clockwise) is obtained by powering the unit with the direct three phases L1 L2 L3 connected to the terminals U1-V1- W1 respectively (standard 6 terminal construction) or terminals 1-2-3 (9 terminal construction for North American market).

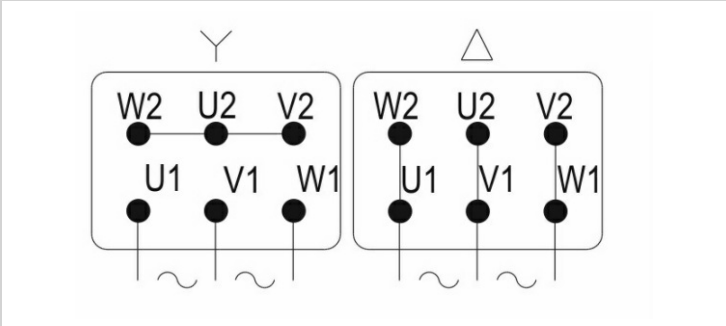

Standard 6 terminal construction

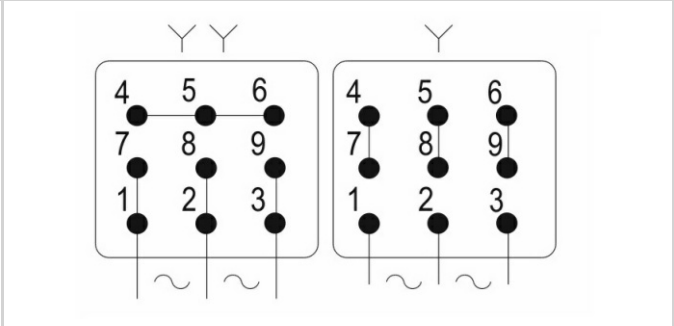

9 terminal construction

2.9.3 D series

The double polarity motors in the series D are used in applications requiring two fixed speeds, obtained by swapping over the poles of the motor. They comprise:

1. Motors with polarity ratio of 2 (2/4 pole, 4/8 pole) with single winding and pole number switching via modification of the internal connections; the standard version is with Dahlander YY-D connection and power with single voltage 400V/50Hz;
2. Motors with polarity ratio other than 2 (2/8 poles) for which there are two distinct windings and the possibility of supply with one voltage with a Y or D connection. Motors in standard execution are set only with the Y-Y connection and single voltage 400V/50Hz.

The conventional clockwise direction of rotation for D series motors is obtained by supplying the terminals U-V-W respectively with the direct triple voltage of the supply network L1-L2-L3.

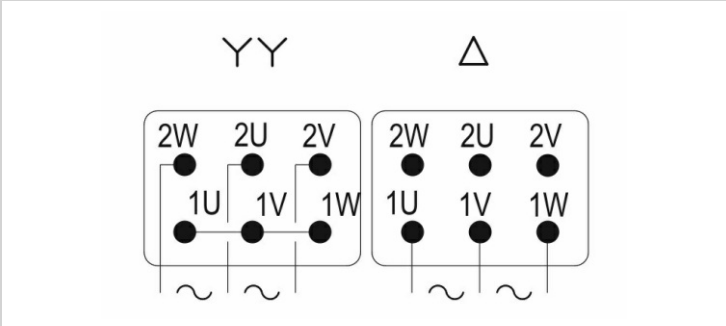

Connections for motors with Dahlander winding (YY/Δ)

YY (high speed) / Δ (low speed)

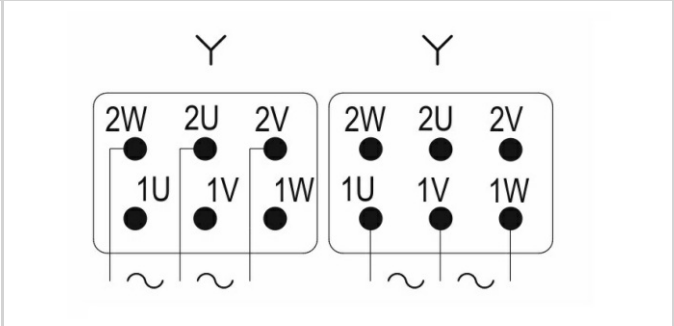

Connections for motors with double winding (Y/Y)

Y (high speed) / Y (low speed)

In applications of double polarity motors it is necessary to pay special attention to the phases of switching over from one polarity to the other. We recommend low speed starting with switching to high speed after completion of the starting phase. When passing over from the low polarity (high speed) to the high polarity (low speed) it is necessary to consider the braking torque that is applied during switchover; because when the synchronous speed is exceeded, the torque becomes negative; therefore when passing over the high and low speed, the load torque is sharply compounded with the braking torque, which applies its action until the motor stabilizes at the new point of operation at low speed; the stress created during switchover must not be neglected when sizing the transmission.

2.9.4 S series

The technical data given in the tables in the catalogue refer to standard single-phase asynchronous motors with running capacitor permanently activated, insulated in class F and in continuous duty S1, supplied at the nominal voltage of 230V and nominal frequency 50Hz. The allowed voltage tolerance is ±5%. Standard motors cannot generally be used at 60Hz; as an option, motors with an supply voltage of 230V 60Hz or 115V 60Hz can be supplied; other supply voltage values are available upon request.

Single-phase motors (S series) have two separate windings: one running winding distributed on 2/3 of the stator slots and an auxiliary winding distributed on 1/3 of the slots. The type of winding makes it possible to reverse the direction of rotation by modifying two connections on the terminal board, or externally with two contactors.

As an alternative, as an option, in case of 230V 50Hz supply voltage, single-phase motors with balanced winding - with one run and one auxiliary winding - can be supplied, composed of two identical windings each distributed over 1/2 of the stator slots. In this case the motor's performance in terms of torque is generally lower. This winding is only used for low-powered motors (size 63/71/80) and it has the great advantage of being able to swap over the direction of rotation from the outside without using the two contactors, by simply using a switch (with positions 0-1-2).

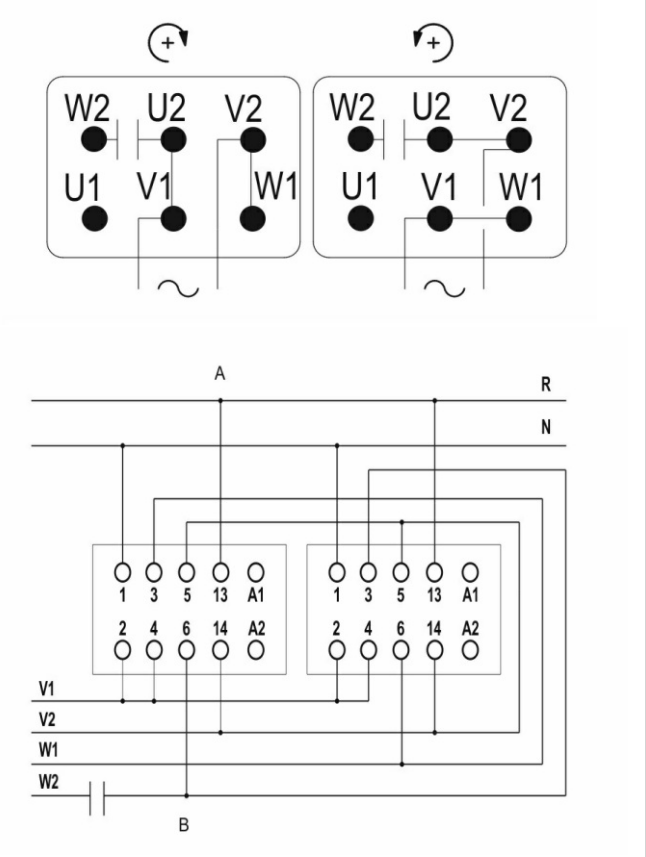

Standard winding
A - Power line B - Capacitor

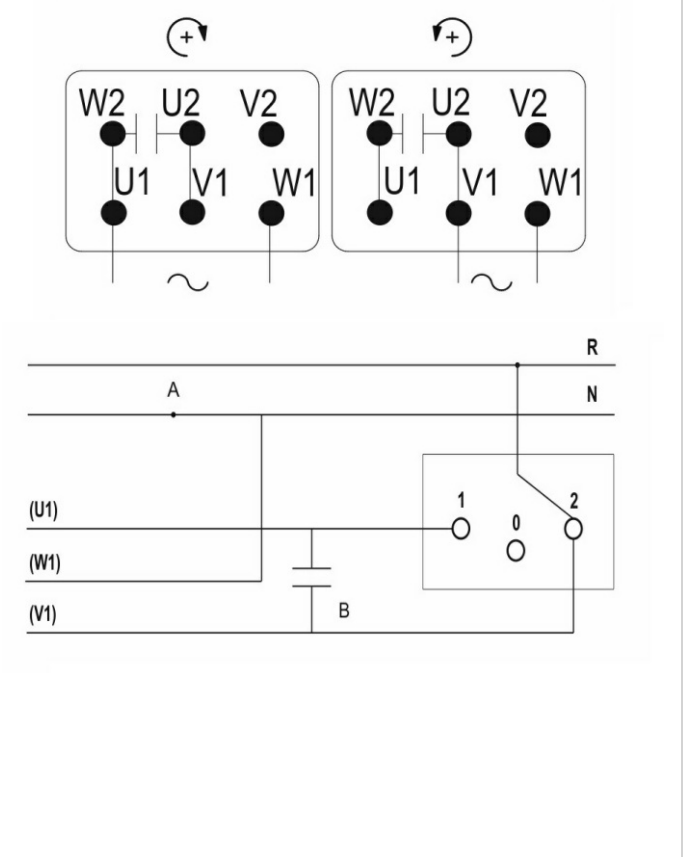

Balanced winding
A - Power line B - Capacitor

2.9.5 HSE series

HSE SERIES (high starting torque single phase with electronic cutout)
Standard single-phase asynchronous series motors (S series), due to their design and in contrast with three-phase motors, generally have starting torques lower than the nominal torque. In applications where the required starting torque is high, it is possible to use series motors which, along with a permanently activated running capacitor, are equipped with an auxiliary capacitor that is only activated in the motor start-up phase and is disconnected once full rate has been reached. The auxiliary capacitor makes it possible to obtain starting torques comparable to a three-phase motor of the same power (see graph).

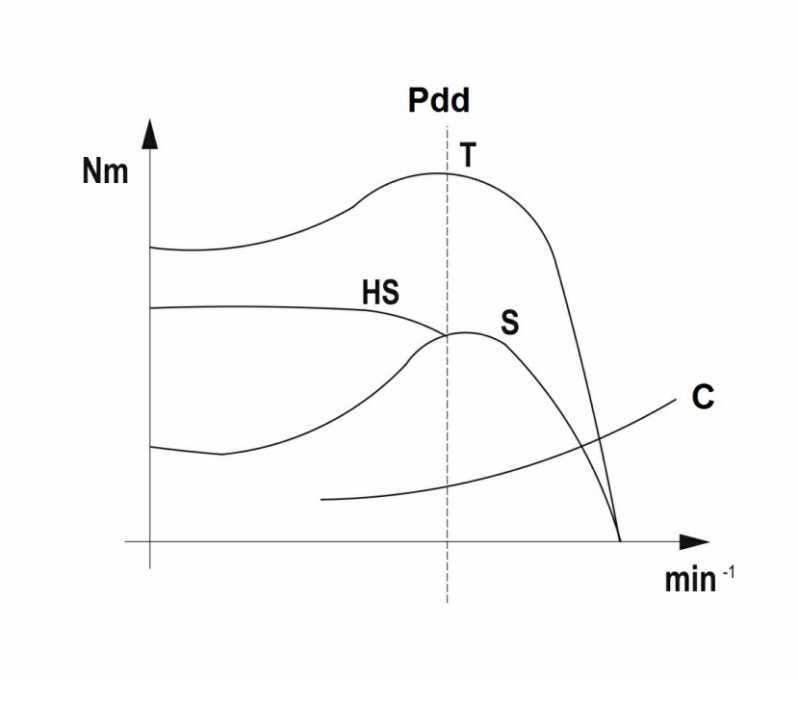

Pdd - Cutout detachment point C - Load

Characteristics
To disconnect the auxiliary capacitor there is a triac device (electronic cutout) sensitive to the capacitor starting voltage which, unlike current relay and timer solutions, can be used in many types of motors (compressors, centrifugal pumps, etc.) also with inertia during switching off and reversing the direction of rotation. The cutout allows for safe starting under load since, as it is sensitive to the voltage at the starting capacitor terminals, which is itself proportional to the motor speed, the starting capacitor is only disengaged when a certain voltage is reached, corresponding to around 70% of nominal speed and thus only when the motor is effectively started (as happens with centrifugal cutouts). It also has a much shorter re-insertion time than other electronic solutions, since the motor can be restarted after a stop in 1 second; Note also the flexibility and simplicity of the construction (in practice a high starting torque HSE motor can be obtained simply by adding the cutout and starting capacitor to a normal S series motor). The HSE version is thus very competitive in comparison to centrifugal cutout solutions since it requires no special parts (motor shield, shaft, fan cover, etc.); it also maintains - except for the presence of the capacitors - the same overall dimensions as a standard motor (n advantage in cases in which an increased shaft length due to the application of a centrifugal cutout would not be tolerable). The device is designed for use also on balanced winding motors. The construction without centrifugal cutout mounted at the back of the motor, means brake motor versions are also available (HSB series, on request).

Protection equipment
The cutout is an internal protection device which trips when starting takes longer than 3 seconds (after which it is evident that either the application is not correctly sized or the motor is blocked by some external factor). Furthermore, there is a voltage discharge resistance to safeguard the correct operation of the capacitors (after the motor stops the capacitors are still charged, so any subsequent starting can generate hazardous overvoltages if the charge is not discharged).

Caution
For a correct use of HSE series single-phase motors, the following points must be considered:

- The device's insertion time is around 1 second; this means that the device does not work if there are multiple starts in a period of less than one second;
- once the motor has started, the device disengages and can be restored only by shutting down and restarting the

2.9 SERIES AND HOOKUP

motor; under heavy, lengthy overloads which drastically reduce motor speed, the device does not act and the motor will tend to come to a stop; it is thus best that the motor is always coordinated with protection equipment in the electrical cabinet (thermal cutouts) to prevent the motor stalling or jamming. Upon request, to overcome this limit of the standard electronic cutout, a special electronic cutout can be requested: in case of temporary overload with strong speed reduction, it allows starting capacitor activation also when motor is already started.

Warning for all the single phase motors (S and HSE series)
Unlike the three phase motors, all the single phase motors have higher losses at no-load than full load: therefore you should not work at no-load for a long time to avoid overheating.

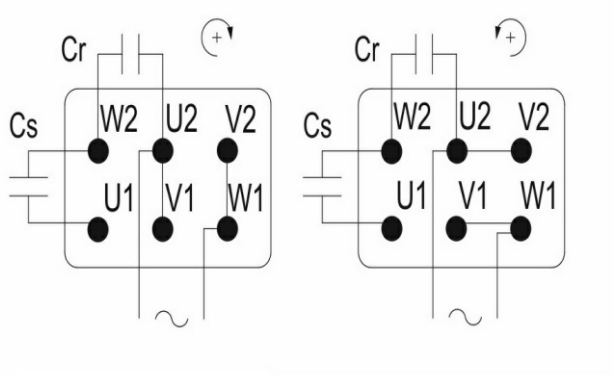

HSE series - standard winding

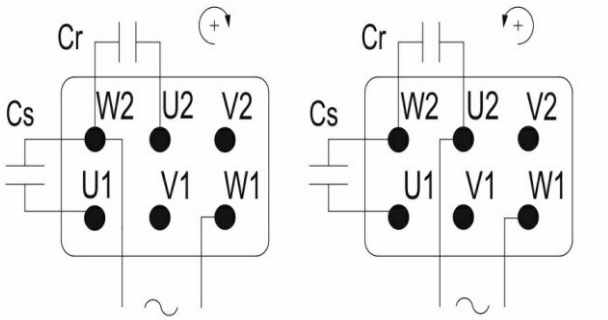

HSE series - balanced winding

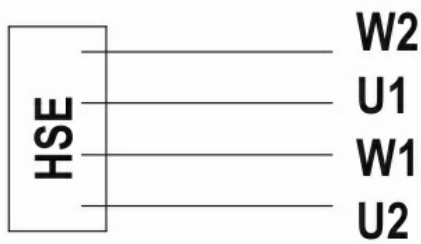

W2 - Yellow
U1 - Brown
W1 - Green
U2 - White

2.10 BRAKE MOTORS

2.10.1 Brake motors

Standard motors (TS, TH, TP, D) can be constructed as brake motors (TBS, TBH, TBP, DB) when the driven machine must be stopped quickly and safely. This is done without modifying the motor's electrical or mechanical assemblies, except for the non-drive side where the brake is applied. The brake is electromagnetic in various versions for the range of possible applications.

Brake: FM
Power supply: DC
Action: Negative (1)
Applications: Ideal for applications which require smooth, silent and gradual operation (both in starting and braking thanks to the slower response of DC brakes), accompanied by rapid release and braking.
Typical applications: gearmotors, transfer machines, electric trucks.

Brake: MS
Power supply: AC
Action: Negative (1)
Applications: Ideal for applications requiring rapid and precise braking and high braking loads.
Typical applications: automation with a high number of actions, lifting and handling equipment, packaging and packing machines.

Brake: ML
Power supply: DC
Action: Negative (1)
Applications: Ideal for applications requiring smooth gradual braking and high loads per braking cycle (thanks to the steel or cast iron disk mounted to the motor shaft, which can dissipated high braking energies); also designed for reduced size and low cost.
Typical applications: cutting machines (e.g. wood working), safety stops (parking brakes).

(1) negative action: the brake acts without power supply.

If not otherwise specified, Motovario supplies brake motors with FM type DC brakes.

2.10.2 FM brake

Operation
The FM brake is a DC electromagnetic brake and acts with no power supply through the pressure of the springs. When the brake magnet (1) is powered, the moving coil (2) is attracted against the brake body and overcomes the spring force (7) thus leaving the shaft to which the brake disk (3) is mounted axially free on the toothed hub (4), to rotate freely. Once power is shut off, the springs press the moving coil and hence the disk mounted to the hub, against the motor shield (14) to brake the motor. Brake motors with FM brakes in the standard version have a standard protection rating of IP54.

Characteristics:
- power supply 230V±10% 50/60Hz or 400V±10% 50/60Hz; other voltages available as options. The brake's power voltage must always be specified if the brake is ordered with separate power supply (see below, "Hookup for DC brakes").
- service S1, insulation class F;
- silent friction surfaces, with no asbestos, with double braking surface;
- steel disk brake, sliding on splined drive hub; vibration damping O-ring;
- fixed braking moment selected in relation to nominal motor torque (value given in motor technical data table). Optionally, disks can be supplied with other braking moments; see column Mb in the table "Brake characteristic values". On request, brakes can be supplied with adjustable braking moment.

Options
- manual release lever with automatic return, hand lever can be removed; it is useful for manual operations in case of power outage or during installation; the lever is parallel to the terminal box cover; on request we can evaluate the possibility to supply the lever a different position; in case of gearmotors, the different positions available for the lever are always referred to the terminal block box position. As an option we can supply a release lever which can be locked in the released position, by screwing it in until it engages with a lug in the brake body.
- Anti-seizing stainless steel washer. This is a stainless steel washer mounted between the motor shield and brake disk to prevent the ferode from seizing to the shield, for example, during long periods of disuse.
- Brake motor with protection rating IP55. Including: a) protective boot to prevent foreign matter entering the brake (e.g.: textile flock); b) stainless steel washer between motor shield and brake disk; c) stainless steel hub and disk;
- Self-braking motor with IP65 degree of protection, in which, in addition to components for IP55 degree of protection are added: a) plastic caps to close the holes for the passage of the tie-beams of the release lever; b) brake fixing screws sealed with O-ring
- Self-braking motor with IP56 degree of protection, in which, in addition to components for IP55 degree of protection are added: a) hardware and brake fixing nuts in stainless steel; b) stainless steel springs.
- Self-braking motor with IP66 degree of protection which combines the characteristics for IP65 and for IP56.
- Motor with double FM brake. For applications in which, for instance, a redundant brake is required (e.g.: theatres) motors can be supplied with two FM brakes, each with its own rectifier. The motors are normally supplied with both brakes with separate power supply and, given the application, without ventilation, hence in duty S2 10 min or S3 10%.
- Silent brake. To ensure a lower noise level inside special environments. This is achieved by adding a O-ring between moving coil and electromagnet. This option is also available with dual brake and is therefore recom mended for theatre applications.
- Hexagonal recess on non-drive side shaft end for manual rotation with straight hex key (6 mm key for ≤ size 90, 8 mm for sizes 100-112, 10 mm for size 132/160S);
- Microswitch to signal brake locking/releasing and brake ferode wear;
- Flywheel for gradual starting and braking. Brake motors with FM brake can be equipped with a steel hub, placed between the brake and fan, acting as a flywheel to increase the moment of inertia of the system. This is done to obtain
- starting and braking that are less sharp and more progressive to make the action smoother. Gradual starting and stopping is accomplished thanks to the increased moment of inertia, which extends the time of action for a given accelerating and braking torque. The overall length dimensions of the motor for application of the flywheel are
- unchanged with respect to the standard brake version.

Power supply
The brake is powered with direct current through a rectifier bridge, by rectifying the single-phase AC input:
- for three-phase TBS, TBH and TBP motors, the standard input voltage is 230V AC, rectified with a half-wave rectifier to obtain an output of 103V DC; the brake's power supply may be direct (drawn from the motor's power supply) or separate, from an external source (separate power option);
- for 2 pole three-phase DB motors, the standard input voltage is 400V AC, rectified with a half- wave rectifier to obtain an output of 178V DC; in this case the brake power supply is always separate.

Optionally, brakes are available for the following power voltages: 115V AC, 133V AC, 200V AC, 208V AC, 230V AC, 255V AC, 265V AC, 280V AC, 290V AC, 330V AC, 346V AC, 380V AC, 400V AC, 415V AC, 12V DC, 24V DC, 103V DC, 178V DC (if a voltage is requested directly in DC, it is understood that the brake motor will be supplied without rectifier). Possible rectifiers are listed below:

a. half-wave rectifier with NBR filter (standard from size 63 to size 100); in special cases, to adapt the requested AC

voltage to the brake winding's DC voltage, a full-wave DBR rectifier is supplied instead of an NBR rectifier (e.g. 115V AC-103V DC). DBR rectifiers have comparable braking and release response times to NBR rectifiers.

b. half-wave quick detachment rectifier SBR (standard for sizes 112 and 132/160S; optional for sizes 63-100), thanks to which the brake, when release starts, is powered with full-wave rather than half-wave voltage; this results in shorter release times than standard (see "Brake characteristic values" and "Hookup for FM and ML brakes"); it is thus ideal for applications with frequent multiple braking cycles (e.g. lifting).
c. half-wave rapid braking rectifier RSD (optional for size 63 to size 100), which reduces the brake de-excitation period, thus giving braking times comparable to those obtainable by opening the DC side (see "Brake characteristic values" and "Hookup for FM and ML brakes"). This rectifier does not have a rapid braking contact (see "Hookup for FM and ML brakes") and is only available for brake voltages 230V AC - 103V DC and 400V AC - 178V DC.
d. half-wave rectifier for quick detachment and braking RRSD (as an option on all sizes), combines type b) and c) functionality. This recti- fier does not have a rapid braking contact (see "Hookup for FM and ML brakes") and is only available for brake voltages 230V AC - 103V DC and 400V AC - 178V DC.

All rectifiers except for RRSD are also available in versions homologated to the UL/CSA standards. All rectifiers are compliant with the Low Voltage Directive 2006/95/CE; in relation to the EMC Directive 2004/108/CEE, the rectifier/coil assembly is conforming due to the use of a filter on the rectifier (NBR); for DC brakes with rapid half-wave rectifier (SBR, RSD and RRSD) the filter is implemented by connecting a capacitor (440V AC 0.22µF class X2 per EN132400) in parallel with the AC power supply (default configuration for this type of rectifier).

2.10 BRAKE MOTORS

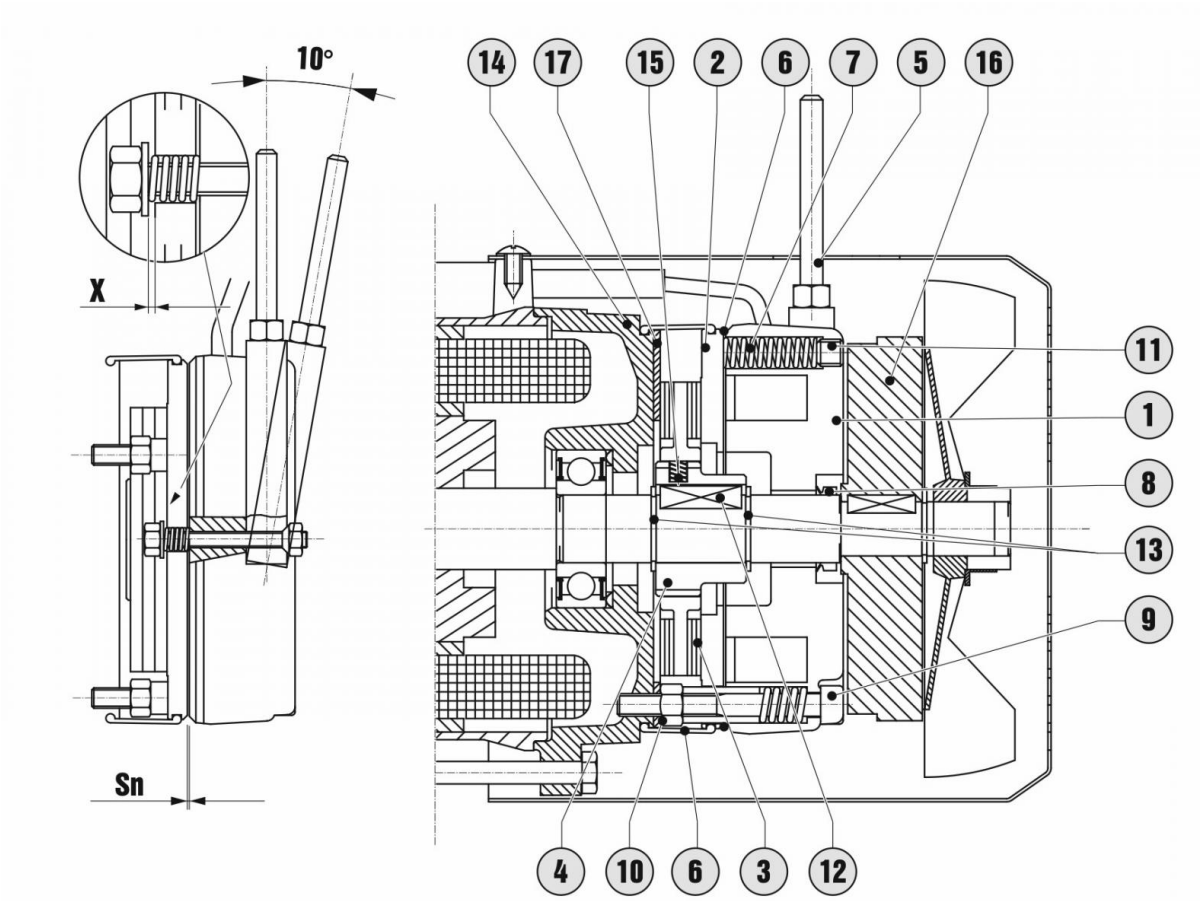

1. Brake magnet
2. Moving coil
3. Brake disk
4. Drive hub
5. Release lever (optional)
6. Boot (in combination with IP 55)
7. Thrust springs
8. V-ring (in combination with IP 55)
9. Mounting bolt
10. Locknuts
11. Braking torque adjuster screw (on request)
12. Key
13. Circlip
14. Cast iron shield
15. Vibration damping O-ring
16. Flywheel (optional)
17. Anti-seizing stainless steel washer (optional)

2.10 BRAKE MOTORS

Brake characteristic values

	T	S_n	S_{max}	X	J_B	W	W_1	t_1	t_{11}	t_2	t_{22}	m_B	P_a	M_B	m_F	J_F
63	..2	0,2	0,5	0,6	0,6	260	15,6	30	20	100	10	1,5	16	1,8-3,5	0,7	6,1
71	..3	0,2	0,5	0,8	1,1	370	22,4	60	25	120	10	2,2	20	2,5-5-7,5-10	1,1	13
80	..4	0,3	0,6	1	1,6	500	30	100	40	150	10	3,1	30	5-10-15-20	1,7	28
90S-L	..5	0,3	0,6	1	3,5	750	45	120	50	220	15	4,9	40	13-26-40-55	2,3	54
100	..5	0,3	0,6	1	3,5	750	45	120	50	220	15	4,9	40	13-26-40-55	3,1	98
112	..6S	0,35	0,7	1,2	8,8	1000	70	-	80	300	30	8,3	50	20-40-60	4,5	145
132S	..6	0,35	0,7	1,2	10,3	1100	77	-	80	200	20	9,5	65	37-50-75-100	4,8	200
132M-160S	..7	0,4	0,8	1,2	22,5	1650	132	-	100	200	20	12,3	65	50-100-150	6,9	350

T = Type
S_n = nominal airgap [mm]
S_{max} = maximum airgap [mm]
X = release lever play [mm]
J_B = brake disk moment of inertia [kgcm ^{2}]
W = maximum energy which can be dissipated by brake [MJ]
W_1 = energy which can be dissipated between two successive adjustments of airgap from S_n to S_{max} [MJ]
t_1(*) = brake release time with normal detachment rectifier (NBR, RSD) [ms]
t_{11}(*) = brake release time with rapid detachment rectifier (SBR, RRSD) [ms]
t_2(*) = brake response time – AC side opening [ms]
t_{22}(*) = brake response time – DC side opening [ms]
m_B = weight [kg]
P_a = power absorption [W]
M_B = brake moments available [Nm]
m_F = flywheel weight [kg]
J_F = flywheel moment of inertia [kgcm ^{2}]

(*) NOTE: the effective values may deviate slightly in relation to the ambient temperature and humidity, the brake temperature and wear of the friction surfaces; t_1, t_{11}, t_2 and t_{22} refer to a bake calibrated with medium airgap, nominal voltage and separate power; as regards the braking moment, one must allow for running in to allow the ferode to adapt to the braking surface of the motor shield, for a period which depends on the actual braking loads; once running in is completed, in nominal operating conditions one can expect a deviation from the declared value of ±15%.

2.10.3 ML brake

Operation
The ML brake is a DC electromagnetic brake and acts with no power supply through the pressure of the springs. When the brake magnet (1) is powered, the moving coil (2) is attracted and overcomes the spring force (4) thus leaving the shaft, to which the brake disk + fan (9) are locked, to rotate freely. When power is shut off, the springs push the moving coil against the disk, thus braking the shaft. Brake motors with ML brakes in the standard version have a standard protection rating of IP54. High protection ratings are not available.

Characteristics:
- power voltage 230V±10% 50/60Hz or 400V±10% 50/60Hz;
- duty S1, insulation class F;
- silent, asbestos free friction surface;
- steel or cast iron braking flywheel;
- axial dimensions less than FM brake;
- airgap adjustable with one nut or collar;
- braking moment set for motor size (see value M_B in “Brake characteristic values”);
- O-ring gasket protects airgap from dust and other external agents.

Options
- Manual release lever with automatic return, hand lever can be removed; it is useful for manual operations in case of power outage or during installation; the lever is parallel to the terminal box cover; on request we can evaluate the possibility to supply the lever a different position; in case of gearmotors, the different positions available for the lever are always referred to the terminal block box position.
- Microswitch to signal brake locking/releasing and brake ferode wear.

Braking moment
For each motor size, independently of the torque delivery, the braking moment is given by the value MB in the table; the braking moment is NOT adjustable.

Power supply
The brake is powered with direct current through a rectifier bridge, by rectifying the single-phase AC input:
- for three-phase TBS, TBH and TBP motors, the standard input voltage is 230V AC, rectified with a half-wave rectifier to obtain an output of 103V DC; the brake’s power supply may be direct (drawn from the motor’s power supply) or separate, from an external source (separate power option);
- for 2 pole three-phase DB motors, the standard input voltage is 400V AC, rectified with a halfwave rectifier to obtain an output of 178V DC; in this case the brake power supply is always separate.

Optionally, brakes can be supplied for the following voltages; 115V AC, 133V AC, 200V AC, 208V AC, 230V AC, 255V AC, 290V AC, 330V AC, 346V AC, 380V AC, 400V AC, 415V AC, 12V DC, 24V DC, 103V DC, 178V DC. If a voltage is requested directly in DC, then the brake motor will be supplied without rectifier. Possible rectifiers are listed below:

a. half-wave rectifier with NBR filter (standard from size 63 to size 100); in special cases, to adapt the requested AC voltage to the brake winding’s DC voltage, a full-wave DBR rectifier is supplied instead of an NBR rectifier (e.g. 115V AC-103V DC). DBR rectifiers have comparable braking and release response times to NBR rectifiers.
b. half-wave quick detachment rectifier SBR (standard for sizes 112 and 132/160S; optional for sizes 63-100), thanks to which the brake, when release starts, is powered with full-wave rather than half- wave voltage; this results in shorter release times than standard (see “Brake characteristic values”); it is thus ideal for applications with frequent multiple braking cycles (e.g. lifting).
c. half-wave rapid braking rectifier RSD (optional for size 63 to size 100), which reduces the brake de-excitation period, thus giving braking times comparable to those obtainable by opening the DC side (see “Brake characteristic values”). This rectifier is only available for brake voltages 230V AC - 103V DC and 400V AC - 178V DC.
d. half-wave rectifier for quick detachment and braking RRSD (optionally available for all sizes), combines type b) and c) functionality. This rectifier is only available for brake voltages 230V AC - 103V DC and 400V AC - 178V DC.

All rectifiers except for RRSD are also available in versions homologated to the UL/CSA standards All rectifiers are compliant with the Low Voltage Directive 2006/95/CE; in relation to the EMC Directive 2004/108/CEE, the rectifier/coil assembly is conforming due to the use of a filter on the rectifier (NBR); for DC brakes with rapid half-wave rectifier (SBR, RSD and RRSD) the filter is implemented by connecting a capacitor (440V AC 0.22mF class X2 per EN132400) in parallel with the AC power supply (default configuration for this type of rectifier).

2.10 BRAKE MOTORS

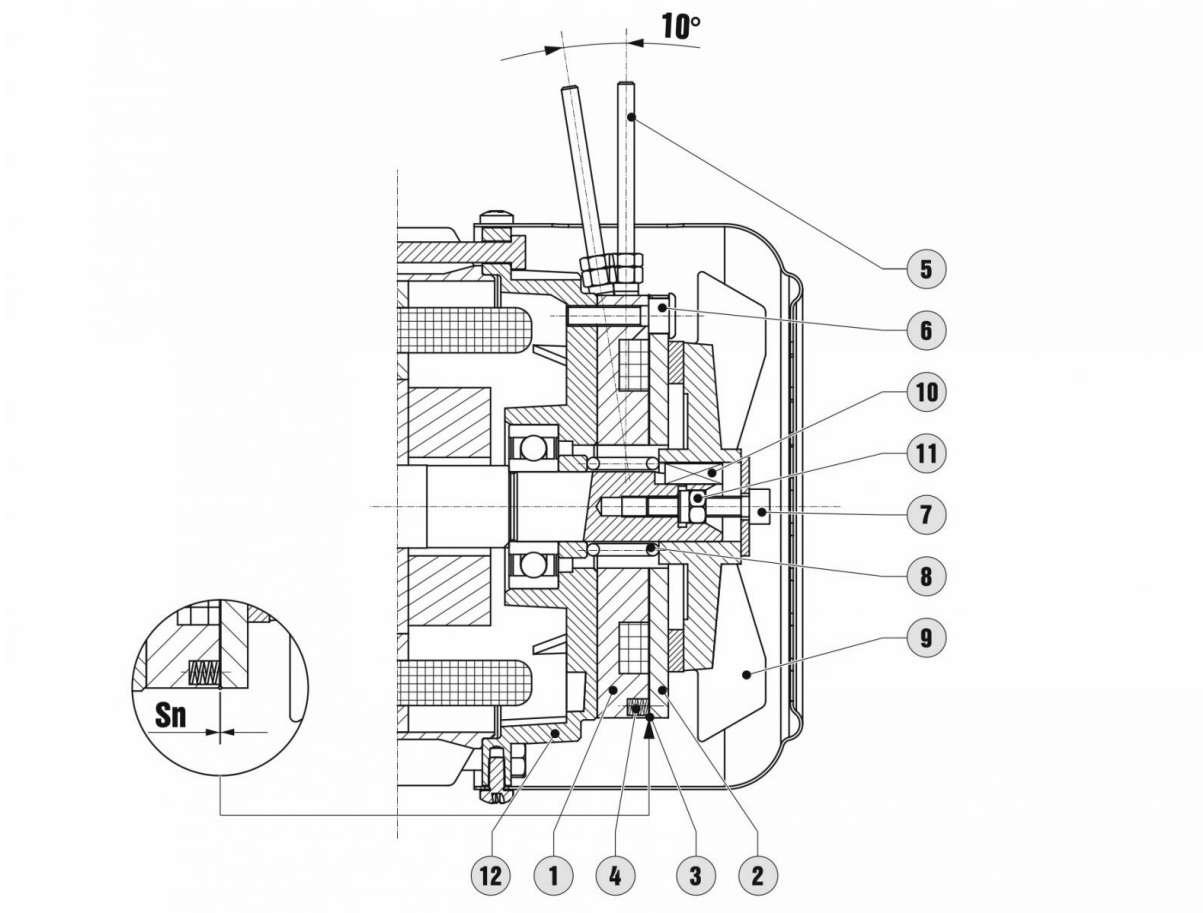

1. Brake magnet
2. Moving coil
3. O-ring
4. Thrust springs
5. Release lever (optional)
6. Mounting bolt
7. Airgap adjuster screw
8. Return spring
9. Steel/cast iron disk + fan
10. Key
11. Self-locking nut
12. Motor shield

2.10 BRAKE MOTORS

Brake characteristic values

	T	S_n	S_{max}	J_B	W	W_1	t_1	t_2	t_{22}	m_B	P_a	M_B
63	3	0,2	0,5	3	250	30	30	80	8	1,1	18	3
71	4	0,2	0,6	5	250	40	40	100	10	1,3	18	4
80	7	0,2	0,6	10	375	60	60	150	15	2,1	25	7
90S-L	7	0,2	0,6	11	375	60	60	150	15	2,1	25	7
100	13	0,25	0,65	30	500	80	100	250	15	3,6	35	13
112	13	0,25	0,65	34	500	80	100	250	25	4	35	13
132S-M 160S	30	0,3	0,7	50	1650	132	150	400	40	7,4	60	30

T = Type
S_n = nominal airgap [mm]
S_{max} = maximum airgap [mm]
J_B = brake disk moment of inertia [kgcm ^{2}]
W = maximum energy which can be dissipated by brake [MJ]
W_1 = energy which can be dissipated between two successive adjustments of airgap from S_n to S_{max} [MJ]
t_1(*) = brake release time [ms]
t_2(*) = brake response time – AC side opening [ms]
t_{22}(*) = brake response time – DC side opening [ms]
m_B = weight [kg]
P_a = power absorption [W]
M_B = brake moments available [Nm]

(*) NOTE: the effective values may deviate slightly in relation to the ambient temperature and humidity, the brake temperature and wear of the friction surfaces; t_1, t_2 and t_{22} refer to a bake calibrated with medium airgap, nominal voltage and separate power; as regards the braking moment, one must allow for running in to allow the ferode to adapt to the braking surface of the motor shield, for a period which depends on the actual braking loads; once running in is completed, in nominal operating conditions one can expect a deviation from the declared value of ±10%.

2.10.4 Hookup for FM and ML brakes

If the brake power is derived directly from the motor or is independent, one speaks of direct and separate brake power respectively. In detail, with reference to the figures given below:

1. Direct brake power: supply cables on the AC side of the rectifier are connected to the motor's power terminal board; when you power up the motor, the brake coil is automatically energised and the brake is released; when power to the motor is shut off, the brake automatically brakes the motor. During this phase, the brake response time t_2 has to be added to the delay R generated by the inertia of the load and by the energy accumulated by the motor. R changes in every motor and – as it depends on the load – cannot be previously calculated.
2. Separate brake power, brake opens only from the AC side: the brake is powered, via the rectifier, off terminals separate from those of the motor. In this case stop time t_2 does not depend on the characteristics of both the motor and load.
3. Direct brake power, DC side opens: connection possible on the basis of type 1, if one can cable the rectifier's rapid braking contact (DC side opening) as shown in figure 3. Despite the direct power supply (see point 1), the braking response time is independent of the characteristics of the motor and load, and is significantly shorter than that of case 2 ($t_{22} < t_2$). This connection is thus an alternative to the use of rapid braking rectifiers (RSD and RRSD).
4. Separate brake power, AC and DC sides open: connection possible on the basis of type 2, if one can cable the rectifier's rapid braking contact (DC side opening) as shown in figure 4. Response time equal to that of type 3, hence this connection is an alternative to the use of rapid braking rectifiers (RSD and RRSD). The advantage over the previous case is that, during braking, the energy accumulated by the motor does not discharge into the rectifier, thus safeguarding its service life.

Motovario supplies brakes connected as type 1 or 2 when ordered as "direct" or "separate" power supply respectively. Type 3 and 4 connections must be implemented by the client. If SBR rapid release rectifiers are used, the brake release time reduces from t_1 to t_{11} (see graph below). In case of independent power supply of the brake through direct current, therefore without any rectifier (ex. 24Vdc), the supply cables of the brake are set inside the terminal box and connected in a fly terminal board mammuth type. In this case, not considering the external power supply, for the time of operations you can refer to case 4.

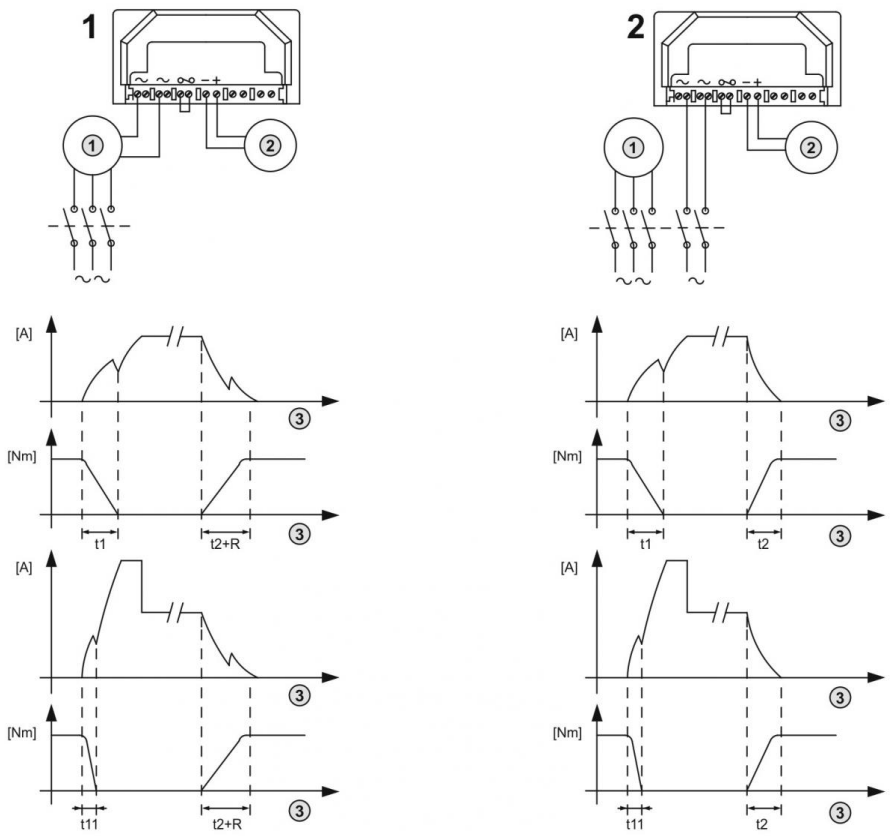

2.10 BRAKE MOTORS

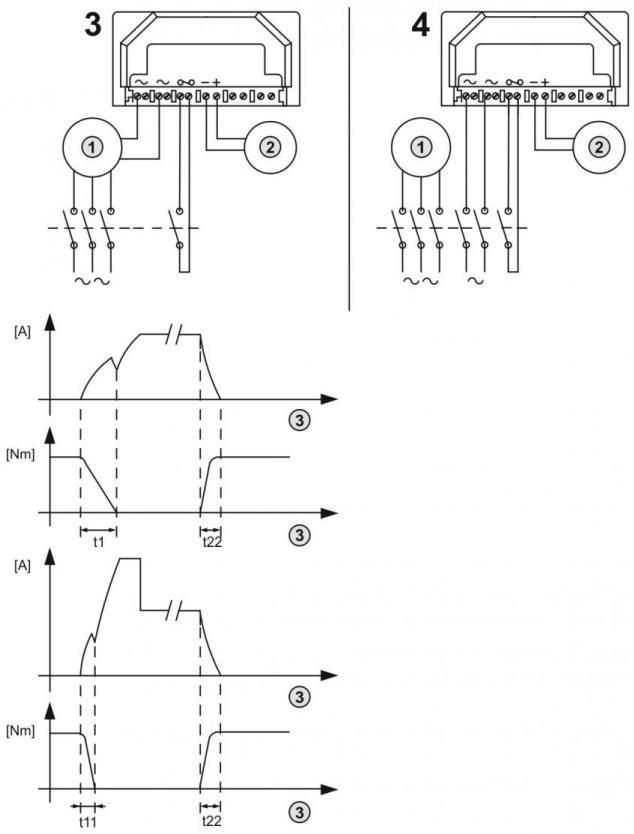

2.10.5 MS brake

Operation
MS brake is an a. c. electromagnetic brake and acts with no power supply through the pressure of the springs. When the brake magnet (1) is powered, the moving coil (2) is attracted against the brake body and overcomes the spring force (7) thus leaving the shaft to which the brake disk (3) is mounted axially free on the toothed hub (4), to rotate freely. Once power is shut off, the springs press the moving coil and hence the disk mounted to the hub, against the motor shield (14) to brake the motor.

Characteristics
- standard power supply voltage 230/400V±10% 50Hz 265/460V±10% 60Hz; other voltages available as options;
- duty S1, insulation class F;
- silent friction surfaces, with no asbestos, with double braking surface;
- steel brake disk sliding on the splined driving hub;
- fixed braking moment selected in relation to nomi- nal motor torque (value given in motor technical data table). Optionally, disks can be supplied with other braking moments; see column M_b in the table "Brake characteristic values". On request, brakes can be supplied with adjustable braking moment.

Options
- Manual release lever with automatic return, hand lever can be removed; it is useful for manual operations in case of power outage or during installation; the lever is parallel to the terminal box cover; on request we can evaluate other lever positions; in case of gearmotors, the different po- sitions available for the lever are always referred to the terminal block box position.
- Anti-seizing stainless steel washer. This is a stain- less steel washer mounted between the motor shield and brake disk to prevent the ferode from seizing to the cast iron shield, for example, during long periods of disuse.
- Brake motor with protection rating IP55 for ap- plications in special conditions (e.g. installation outdoors) including: a) boot + O-ring to prevent foreign matter entering the brake (e.g.: textile flock); b) stainless steel washer between motor shield and brake disk; c) stainless steel hub and disk; d) V-ring on the motor shaft.
- Hexagonal recess on non-drive side shaft end for manual rotation with straight hex key (6 mm key for ≤ size 90, 8 mm for sizes 100-112, 10 mm for size 132/160S).

Power supply
The brake is powered AC 230/400V±10% 50Hz.
Optionally, brakes can be supplied for the following voltages: 115/200V 50Hz, 120/208V 60Hz, 133/230V 50Hz, 208/360V 50Hz, 208/360V 60Hz, 255/440V 50Hz, 200/346-220/380V 50-60Hz, 290/500-330/575V 50-60Hz, 400/690-460/800V 50-60Hz. In three-phase TBS, TBH and TBP motors, the brake is usually powered directly from the motor's power supply (direct power). Separate brake power is available as an option; in this case, a second terminal block is mounted in the terminal box to which are cabled the brake cables and an additional cable gland is provided to route the brake power cord into the terminal box; brake power is always separate for 2 pole three-phase DB motors.

2.10 BRAKE MOTORS

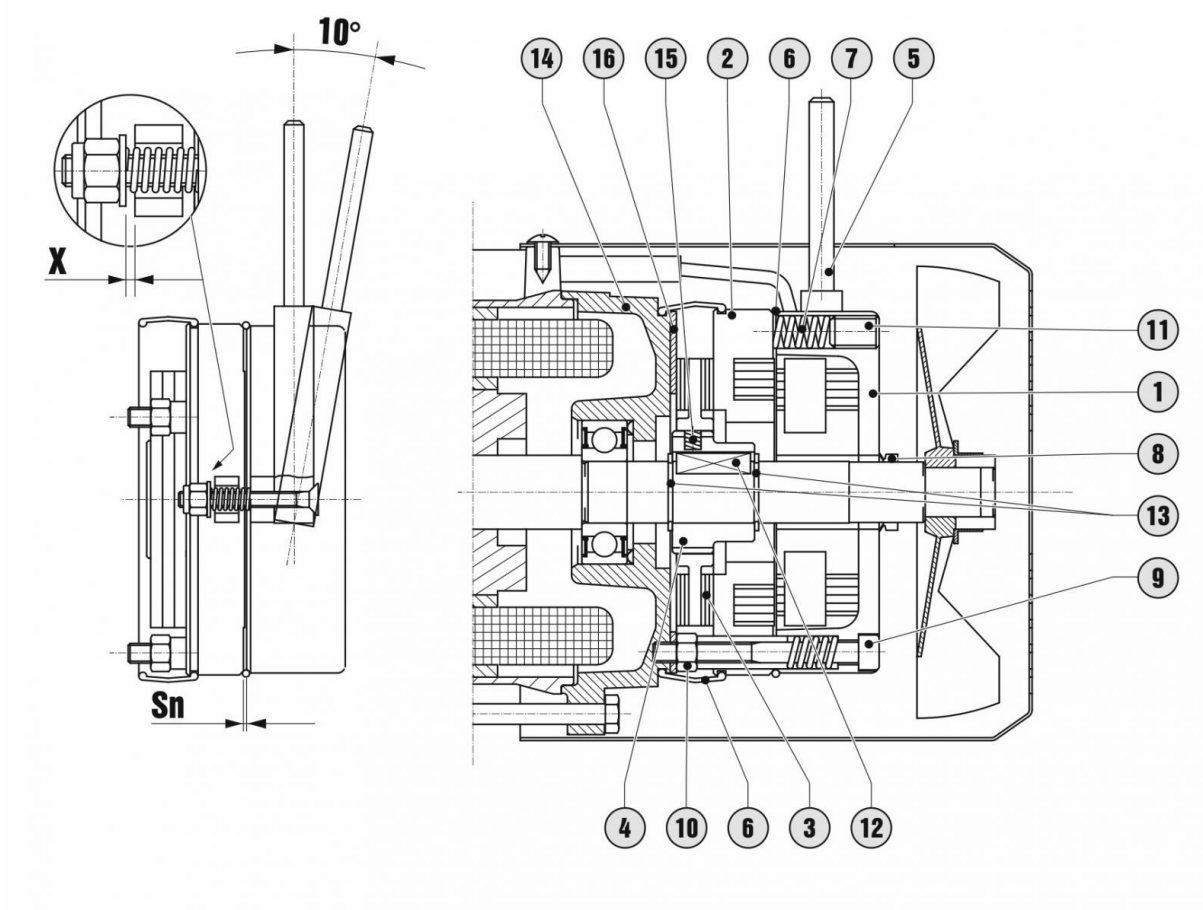

1. Brake magnet
2. Moving coil
3. Brake disk
4. Drive hub
5. Release lever (optional)
6. Boot + O-ring (optional)
7. Thrust springs
8. V-ring (optional - in combination with protective boot + O-ring)
9. Mounting bolt
10. Locknuts
11. Braking torque adjuster screw (on request)
12. Key
13. Circlip
14. Cast iron shield
15. Vibration damping O-ring
16. Anti-seizing stainless steel washer (optional)

2.10 BRAKE MOTORS

Brake characteristic values

	T	S_n	S_{max}	X	J_B	W	W_1	t_1	t_2	m_B	P_a	M_B
63	..2	0,2	0,5	0,6	0,6	260	15,6	4	20	1,3	60	1,8-3,5
71	..3	0,2	0,5	0,8	1,1	370	22,4	4	40	1,9	80	2,5-5-7,5-10
80	..4	0,3	0,6	1	1,6	500	30	6	60	3	110	5-10-15-20
90S-90L-100	..5	0,3	0,6	1	3,5	750	45	8	90	5,6	250	13-26-40
112	..6S	0,35	0,7	1,2	8,8	1000	70	16	120	9,7	470	40-60
132S	..6	0,35	0,7	1,2	10,3	1100	77	16	140	10,3	550	50-75-100
132L-M/160S	..7	0,4	0,8	1,2	22,5	1650	132	16	180	14,7	600	50-100-150

T = Type
S_n = nominal airgap [mm]
S_{max} = maximum airgap [mm]
X = release lever play [mm]
J_B = brake disk moment of inertia [kgcm ^{2}]
W = maximum energy which can be dissipated by brake [MJ]
W_1 = energy which can be dissipated between two successive adjustments of airgap from S_n to S_{max} [MJ]
t_1(*) = brake release time [ms]
t_2(*) = brake response time [ms]
m_B = weight [kg]
P_a = power absorption [VA]
M_B = brake moments available [Nm]

(*) NOTE: the effective values may deviate slightly in relation to the ambient temperature and humidity, the brake temperature and wear of the friction surfaces; t_1 and t_2 refer to a bake calibrated with medium airgap, nominal voltage and separate power; as regards the braking moment, one must allow for running in to allow the ferode to adapt to the braking surface of the motor shield, for a period which depends on the actual braking loads; once running in is completed, in nominal operating conditions one can expect a deviation from the declared value of ±10%.

2.10.6 Hookup for MS brakes

1. Direct brake power: the brake is powered directly off the motor's terminal block; when the motor is powered up, the brake coil is automatically energised and the brake is released; when power to the motor is shut off, the brake coil is automatically de-energised and the brake brakes the motor. During this phase, the braking response time t_2 has to be added to delay R, generated by the inertia of the load and by the energy accumulated by the motor. R changes in every motor and – as it depends on the load – cannot be previously calculated.

1. Time
2. Motor
3. Brake

A. Delta connection
B. Star connection
C. Motor terminal board
D. Brake

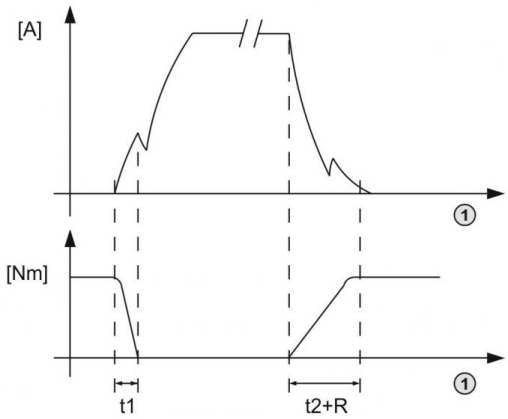

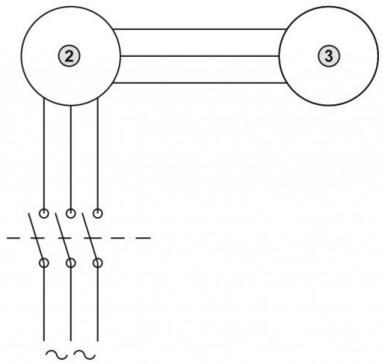

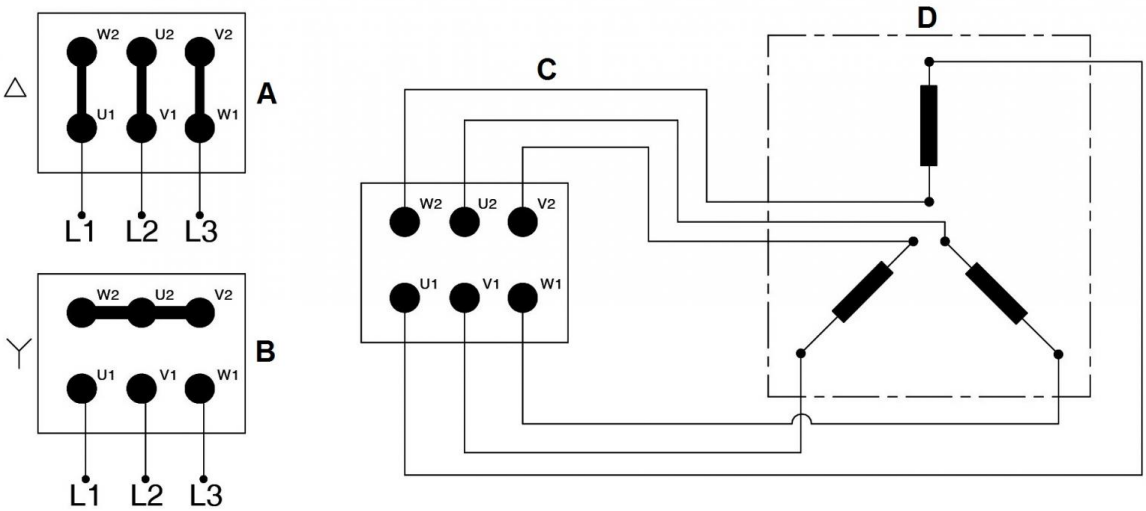

2.10 BRAKE MOTORS

2. Separate brake power: the brake is powered off a terminal block separate from the motor's block; in this case t_1 and t depend only on the characteristics of the brake.

1. Time
2. Motor
3. Brake

A. Motor terminal board
B. Auxiliary terminal board
C. Brake
D. Delta connection
E. Star connection

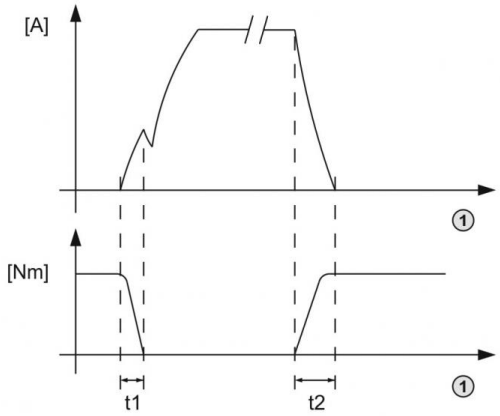

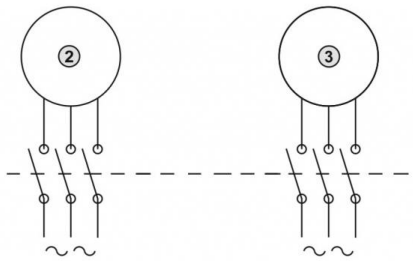

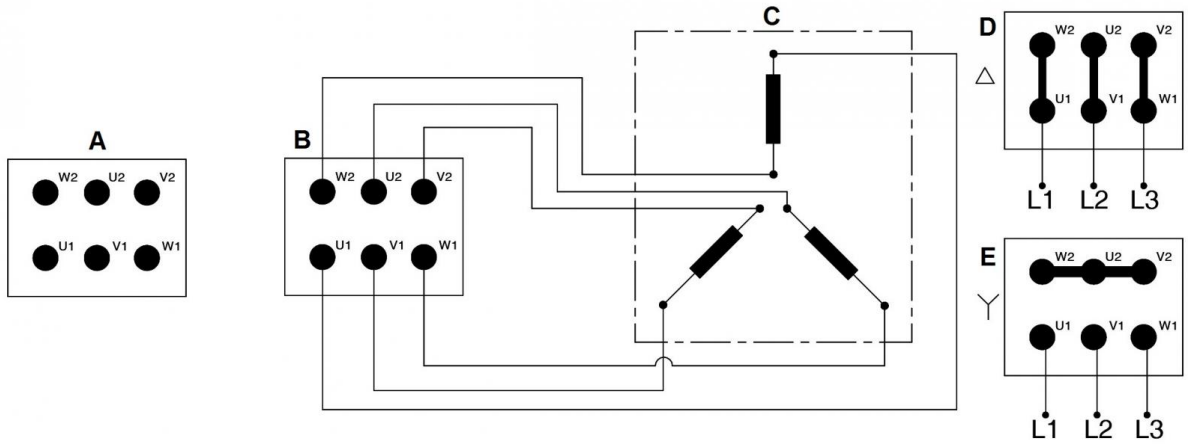

2.10.7 Notes and calculations

Calculating the braking moment
The rating of the brake depends largely on the moment of inertia it is to brake, the number of braking cycles per hour, the severity of the duty and the required stopping times; in particular, the following must be borne in mind:

- braking moment;
- wear of friction surfaces in relation to service intervals;
- thermal load (work which can be dissipated by the brake in relation to the load's moment of inertia and the number of cycles per hour);
- special ambient conditions for which guards or corrosion proofing are required.

The calculation of the braking moment M_B for a given application depends on the following design parameters:

J_{tot} = total inertia of rotating parts reduced to motor shaft [kgm ^{2}]
n_0 = motor shaft speed [rpm]
t_F = braking time [s]
M_L = moment of load acting on system (e.g. load to be lifted, resisting moment, etc.)
The braking moment is calculated as follows:

$$M_B = K\,[(2\pi * n_0 / 60) * J_{tot} \pm M_L] / t_F$$

where:

- K = safety coefficient (≥2)
- M_L takes the following sign:
  - "-" when lifting a weight or torque opposing the motor's direction of rotation;
  - "+" when lowering a weight or torque in the motor's direction of rotation.

Verification of heat which can be dissipated
In each cycle, the energy of the moving masses is transformed into heat by friction. The work done during braking is:

$$W_B = J_{tot} * [(2\pi * n_0 / 60)^2 / 2] * [MB / MB \pm M_L] \qquad [J]$$

When we know the work done during a braking cycle W_B, the application's number of cycles per hour Z must be less than the maximum number of cycles per hour permitted for the type of brake selected as shown in the graph (W_{Bmax}-Z). Instead, when we know the number of cycles per hour Z, the corresponding maximum work to be done W_{Bmax} must be greater than that of the actual application (calculation).

2.10 BRAKE MOTORS

Braking work which can be dissipated between two adjustments

Given the moments of inertia of the moving masses reduced to the shaft to be braked, and once the work per cycle W_B has been calculated, the number of cycles per interval between two successive adjustments is:

$$N = W_1 / W_B$$

W_1 is given in the table for the type of brake in question.

FM - MS

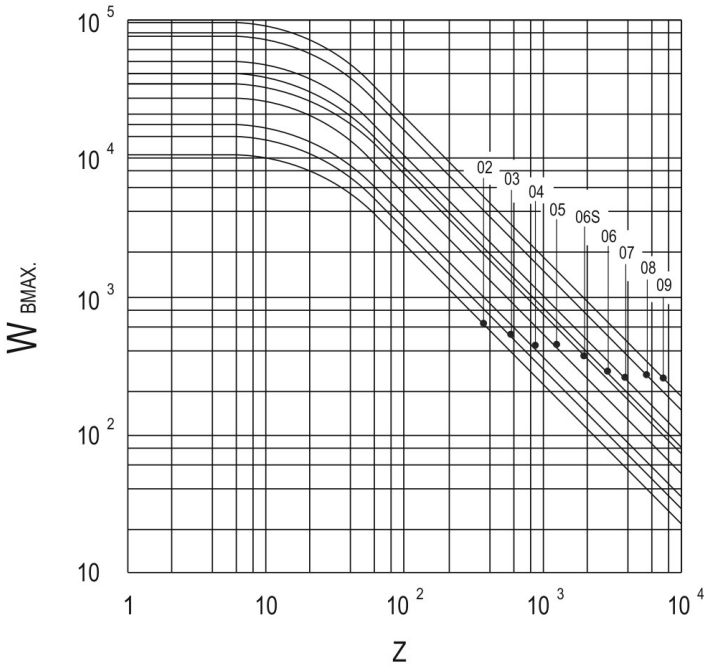

ML

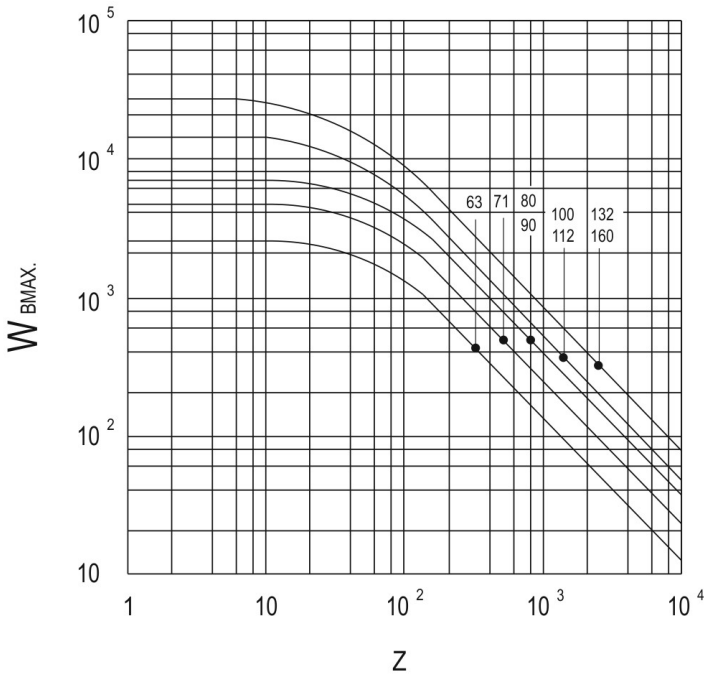

2.10 BRAKE MOTORS

Starting frequency
For a given application, the maximum starting frequency Z in relation to the load and the inertias can be determined as:

$$Z = K_J * K_M * Z_O \quad [h^{-1}]$$

where:
K_J = coefficient given in the table in relation to J/J_T
K_M = coefficient given in the table in relation to M_L/M_S
J_T = moment of inertia of the motor
J = moment of inertia of the load excluding that of the motor itself
M_S = motor starting torque
M_L = resisting moment
Z_O = starting frequency under load and inertia except for that of the motor itself (value given in the performance data tables for each type of motor).
The resulting starting frequency Z must be less than the maximum number of cycles/hour permitted for the brake; if this condition is not met, the brake is unable to dissipate the heat generated by braking, so one must either reduce the starting frequency or oversize the brake (see brake ratings paragraph). If the value of Z is close to Z_O, it is advisable to keep the motor windings temperature under control with, for instance, a bimetal cutout.

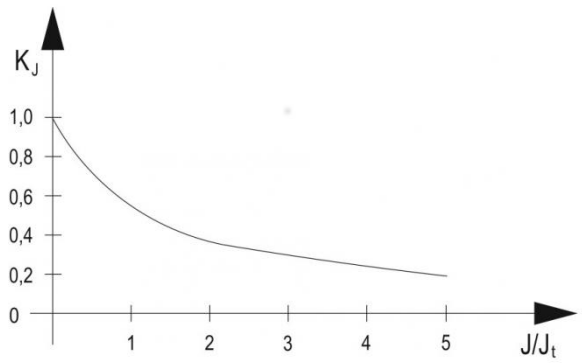

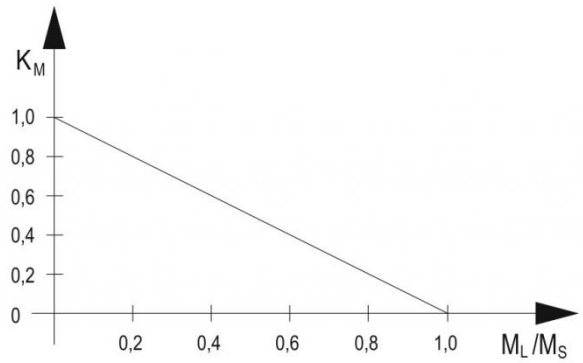

2.11 ELECTRIC MOTOR IDENTIFICATION

Electric motor can feature a metal silk-screen printed and/or punched nameplate or an adhesive label glued on metal support.

THREE-PHASE MOTOR NAMEPLATE LAYOUT	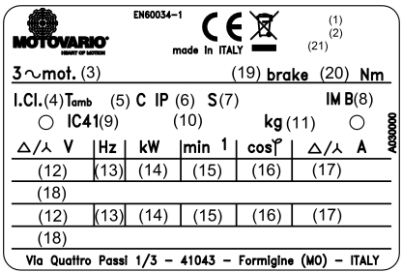
THREE-PHASE MOTOR – FILLED-OUT EXAMPLE	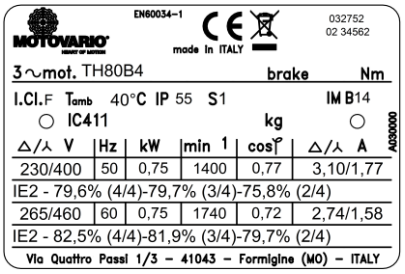
SINGLE-PHASE MOTOR NAMEPLATE LAYOUT	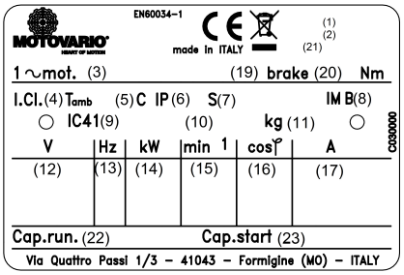
SINGLE-PHASE MOTOR - FILLED-OUT EXAMPLE	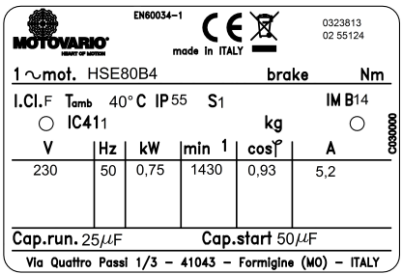

2.11 ELECTRIC MOTOR IDENTIFICATION

UL/CSA MOTOR NAMEPLATE	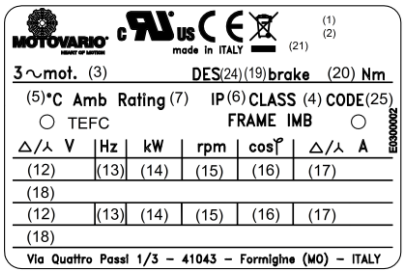
UL/CSA MOTOR – FILLED-OUT	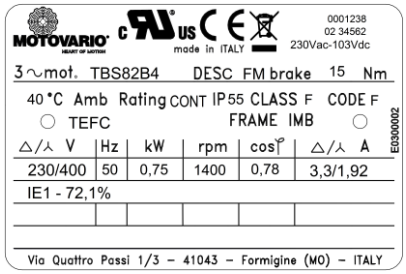
THREE-PHASE MOTOR LABEL	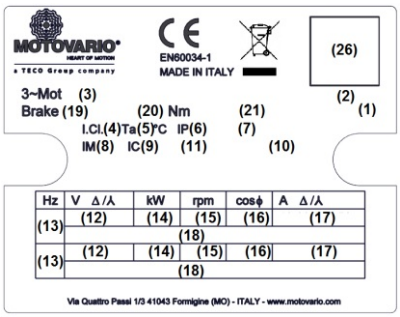
THREE-PHASE MOTOR – FILLED-OUT EXAMPLE	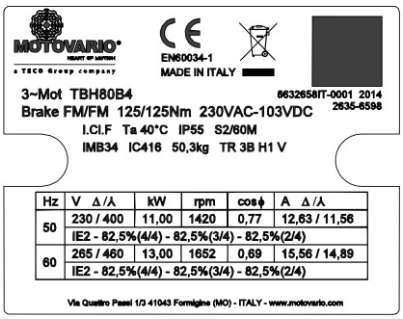

2.11 ELECTRIC MOTOR IDENTIFICATION

SINGLE-PHASE MOTOR LABEL	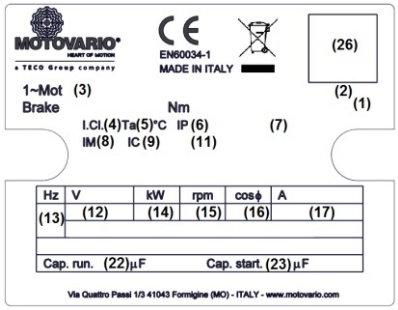
SINGLE-PHASE MOTOR - FILLED-OUT EXAMPLE	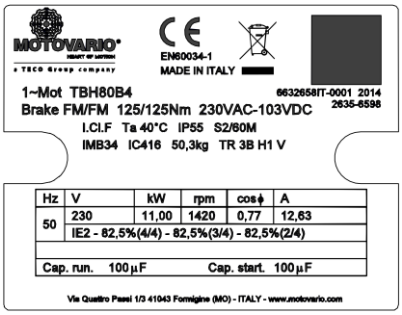
UL/CSA MOTOR LABEL	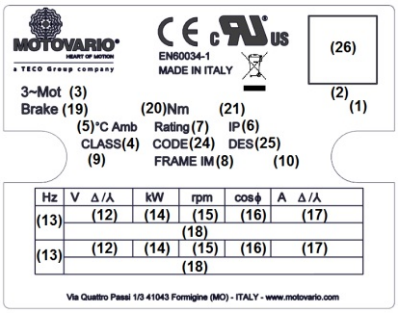
UL/CSA MOTOR – FILLED-OUT	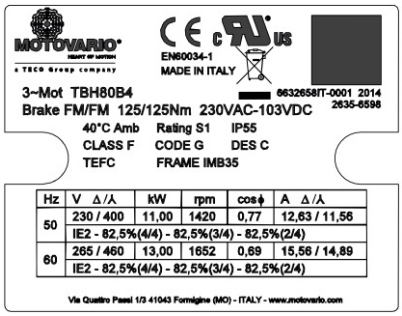

2.11 ELECTRIC MOTOR IDENTIFICATION

1. Serial number
2. Year of manufacture - order number
3. Motor type code (series/size/n. poles)
4. Insulation class
5. Maximum ambient operating temperature
6. Protection rating
7. Duty
8. Mounting position
9. Cooling system (*)
10. Additional options (see below)
11. Motor weight (only for > 30 kg)
12. Motor voltage (depending on connection)
13. Power frequency [Hz]
14. Nominal power delivery [kW]
15. Nominal speed [rpm]
16. Nominal power factor
17. Nominal current (depending on connection) [A]
18. Code IE1, IE2 or IE3 (depending on type of motor and whether applicable) followed by efficiency value at 4/4, 3/4 and 2/4 of nominal power.

Brake motors only

19. Brake type
20. Nominal braking moment [Nm]
21. Brake power supply

Single-phase version only

22. Running capacitor [µF]
23. Starting capacitor [µF]

UL/CSA version only

24. Current identification with rotor blocked (ANSI/NFPA 70-1996)
25. “NEMA Electrical Design Classification”
26. QR code

ADDITIONAL OPTIONS (10)

- H1 condensation heaters for voltage 110V
- H2 condensation heaters for voltage 230V
- LT low temperature construction
- HT high temperature construction
- 3B n. 3 bimetal cutouts
- 3P n. 3 thermistors (PTC)
- A backstop device (counterclockwise rotation permitted)
- B backstop device (clockwise rotation permitted)
- E encoder
- V flywheel
- HC rapid connection

(*) For motors in UL/CSA versions, the cooling system is indicated with the following codes:
TEFC = (T)otally (E)nclosed (F)an (C)ooled - corresponds to IC411 (self-ventilation)
TENV = (T)otally (E)nclosed (N)ot (V)entilated - corresponds to IC410 (non-ventilated)
TEBC = (T)otally (E)nclosed (B)lower (C)ooled - correspnds to IC416 (forced ventilation)

3.1 TS-TBS

2 Pole

400V 50Hz

P_n [kW]	Size	n_n [rpm]	I_n [A]	M_n [Nm]		η_n% (4/4) limit	η_n% (4/4)	η_n% (3/4)	η_n% (2/4)	$\cos\varphi_n$	M_s/M_n	I_s/I_n	M_{max}/M_n	10^{-4}×Kgm²		Kg		Z_0 [10^3×1/h]	M_B [Nm]
														T T	T TB	T T	T TB		
0,12	56B2	2650	0,38	0,43	-	-	57,9	54,1	-	0,77	3,2	3,5	2,7	1,2	-	3,3	-	-	-
0,18	63A2	2800	0,59	0,61	-	-	61,1	59,6	-	0,72	2,9	4,0	3,2	2,0	2,6	3,7	5,2	4,7	1,8
0,25	63B2	2800	0,73	0,85	-	-	65,6	66,1	-	0,75	2,9	4,1	3,2	2,2	2,8	4,1	5,6	4,7	1,8
0,37	63C2	2790	1,00	1,27	-	-	69,6	68,6	-	0,77	2,9	4,4	3,2	2,5	3,1	4,5	6,0	4,0	3,5
0,37	71A2	2820	1,14	1,25	-	-	65,8	66,2	-	0,71	3,1	4,3	3,1	4,0	4,7	5,4	7,6	4,0	5,0
0,55	71B2	2810	1,56	1,87	-	-	70,8	71,2	-	0,72	3,1	4,3	3,0	4,4	5,5	6,0	8,2	4,0	5,0
0,75	71C2	2800	1,95	2,56	IE1	72,1	72,1	71,4	-	0,77	3,0	4,5	2,9	5,1	6,2	7,0	9,2	3,0	7,5
0,75	80A2	2810	2,03	2,55	IE1	72,1	72,1	71,6	-	0,74	2,8	5,0	3,0	9,0	10,6	8,1	11,6	3,0	10,0
1,10	80B2	2830	2,79	3,71	IE1	75,0	75,0	75,0	-	0,76	2,8	5,0	3,0	10,4	12,0	9,2	12,7	3,0	15,0
1,50	80C2	2810	3,49	5,10	IE1	77,2	77,5	77,7	-	0,80	2,7	5,0	2,7	12,1	15,6	10,7	14,2	2,5	15,0
1,50	90S2	2840	3,30	5,04	IE1	77,2	79,9	80,4	-	0,82	3,3	6,1	3,5	14,0	15,6	12,7	16,2	2,5	15,0
2,20	90L2	2860	4,83	7,35	IE1	79,7	80,1	80,5	-	0,82	3,5	6,8	3,8	19,0	22,5	15,0	20,6	2,5	26,0
3,00	100LA2	2870	6,73	9,98	IE1	81,5	81,5	81,6	-	0,79	3,0	6,4	3,4	32,0	35,5	19,4	25,0	1,8	40,0
4,00	100LB2	2870	8,37	13,31	IE1	83,1	83,1	83,4	-	0,83	3,2	6,8	3,6	42,0	45,5	22,8	28,4	1,5	40,0
4,00	112MA2	2900	8,79	13,17	IE1	83,1	83,1	83,5	-	0,79	3,0	6,3	3,4	62,7	71,5	26,6	36,3	1,5	40,0
5,50	112MB2	2910	11,40	18,05	IE1	84,7	84,9	85,0	-	0,82	3,3	6,7	3,5	72,4	81,2	30,8	40,5	1,4	60,0
5,50	132SA2	2910	11,16	18,05	IE1	84,7	84,7	84,9	-	0,84	3,0	6,3	3,2	106,0	116,0	36,0	46,3	1,2	75,0
7,50	132SB2	2910	14,47	24,61	IE1	86,0	86,0	86,1	-	0,87	2,6	6,6	3,2	142,0	152,0	41,9	52,2	1,1	75,0
9,20	132MA2	2910	17,37	30,19	IE1	86,9	86,9	87,1	-	0,88	3,0	7,0	3,3	180,0	203,0	49,2	63,9	1,0	100,0
11,00	132MB2	2910	20,32	36,10	IE1	87,6	87,8	87,8	-	0,89	2,9	7,0	3,2	213,0	236,0	55,1	69,8	0,8	150,0
11,00	160SA2	2910	20,32	36,10	IE1	87,6	87,8	87,8	-	0,89	2,9	7,0	3,2	213,0	236,0	56,9	71,6	0,8	150,0

3.1 TS-TBS

2 Pole

460V 60Hz

P_n [kW]	Size	n_n [rpm]	I_n [A]	M_n [Nm]		η_n% (4/4) limit	η_n% (4/4)	η_n% (3/4)	η_n% (2/4)	$\cos\varphi_n$	$\frac{M_s}{M_n}$	$\frac{I_s}{I_n}$	$\frac{M_{max}}{M_n}$	10^{-4}×Kgm²		Kg		Z_0 [10^3×1/h]	M_B [Nm]
														T T	T TB	T T	T TB		
0,12	56B2	3320	0,34	0,34	-	-	59,6	57,2	-	0,74	3,0	3,3	3,2	1,2	-	3,3	-	-	-
0,18	63A2	3440	0,53	0,50	-	-	62,3	60,4	-	0,68	3,6	4,3	3,7	2,0	2,6	3,7	5,2	4,7	1,8
0,25	63B2	3430	0,66	0,70	-	-	64,7	63,8	-	0,73	3,5	4,3	3,6	2,2	2,8	4,1	5,6	4,7	1,8
0,37	63C2	3430	0,87	1,03	-	-	68,4	67,2	-	0,78	3,5	4,4	3,6	2,5	3,1	4,5	6,0	4,0	3,5
0,37	71A2	3460	1,05	1,02	-	-	65,3	64,1	-	0,68	3,8	4,5	3,7	4,0	4,7	5,4	7,6	4,0	5,0
0,55	71B2	3440	1,48	1,53	-	-	66,6	65,0	-	0,70	3,7	4,4	3,6	4,4	5,5	6,0	8,2	4,0	5,0
0,75	71C2	3420	1,68	2,09	-	-	74,8	72,5	-	0,75	3,5	4,6	3,4	5,1	6,2	7,0	9,2	3,0	7,5
0,75	80A2	3450	1,73	2,08	-	-	74,5	72,1	-	0,73	3,5	5,2	3,7	9,0	10,6	8,1	11,6	3,0	10,0
1,10	80B2	3450	2,39	3,04	-	-	77,1	75,4	-	0,75	3,6	5,1	3,7	10,4	12,0	9,2	12,7	3,0	15,0
1,50	80C2	3440	3,10	4,16	-	-	77,9	77,2	-	0,78	3,4	5,1	3,5	12,1	15,6	10,7	14,2	2,5	15,0
1,50	90S2	3460	3,02	4,14	-	-	77,9	78,2	-	0,80	3,7	5,8	3,9	14,0	15,6	12,7	16,2	2,5	15,0
2,20	90L2	3470	4,33	6,05	-	-	79,8	80,1	-	0,80	4,0	6,1	4,3	19,0	22,5	15,0	20,6	2,5	26,0
3,00	100LA2	3490	5,87	8,21	-	-	82,3	81,9	-	0,78	3,7	6,1	3,9	32,0	35,5	19,4	25,0	1,8	40,0
4,00	100LB2	3490	7,25	10,95	-	-	83,4	83,0	-	0,83	3,8	6,5	4,2	42,0	45,5	22,8	28,4	1,5	40,0
4,00	112MA2	3520	7,71	10,85	-	-	83,5	83,3	-	0,78	3,5	6,6	3,9	62,7	71,5	26,6	36,3	1,5	40,0
5,50	112MB2	3530	10,04	14,88	-	-	84,9	84,7	-	0,81	3,8	6,8	4,0	72,4	81,2	30,8	40,5	1,4	60,0
5,50	132SA2	3520	9,80	14,92	-	-	84,9	85,0	-	0,83	3,6	6,2	3,7	106,0	116,0	36,0	46,3	1,2	75,0
7,50	132SB2	3520	12,63	20,35	-	-	86,7	86,5	-	0,86	3,2	6,6	3,7	142,0	152,0	41,9	52,2	1,1	75,0
9,20	132MA2	3520	15,12	24,96	-	-	87,8	88,1	-	0,87	3,4	6,8	3,9	180,0	203,0	49,2	63,9	1,0	100,0
11,00	132MB2	3520	17,75	29,84	-	-	88,4	88,2	-	0,88	3,4	6,9	3,9	213,0	236,0	55,1	69,8	0,8	150,0
11,00	160SA2	3520	17,75	29,84	-	-	88,4	88,2	-	0,88	3,4	6,9	3,9	213,0	236,0	56,9	71,6	0,8	150,0

3.1 TS-TBS

4 Pole

400V 50Hz

P_n [kW]	Size	n_n [rpm]	I_n [A]	M_n [Nm]		η_n% (4/4) limit	η_n% (4/4)	η_n% (3/4)	η_n% (2/4)	$\cos\varphi_n$	$\frac{M_s}{M_n}$	$\frac{I_s}{I_n}$	$\frac{M_{max}}{M_n}$	10^{-4}×Kgm²		Kg		Z_0 [10^3×1/h]	M_B [Nm]
														T T	T TB	T T	T TB		
0,09	56B4	1250	0,42	0,68	-	-	45,4	43,4	-	0,66	2,0	2,2	2,1	1,5	-	3,1	-	-	-
0,12	63A4	1340	0,48	0,86	-	-	54,6	52,9	-	0,66	2,4	2,8	2,3	2,4	3,0	3,6	5,1	12,5	1,8
0,18	63B4	1330	0,67	1,29	-	-	57,2	54,9	-	0,68	2,3	2,8	2,2	2,8	3,4	4,1	5,6	12,5	3,5
0,22	63C4	1330	0,87	1,58	-	-	57,3	58,1	-	0,64	2,2	2,6	2,2	2,8	3,4	4,2	5,7	10,0	3,5
0,25	63D4	1320	0,83	1,81	-	-	62,4	62,9	-	0,69	2,3	2,9	2,2	3,6	4,2	4,9	6,4	10,0	3,5
0,25	71A4	1390	0,79	1,72	-	-	62,3	61,9	-	0,73	2,3	3,7	2,3	7,8	8,9	5,4	7,6	10,0	5,0
0,37	71B4	1380	1,09	2,56	-	-	66,1	65,3	-	0,74	2,3	3,7	2,3	8,8	9,9	6,0	8,2	10,0	7,5
0,55	71C4	1370	1,50	3,83	-	-	68,7	68,6	-	0,77	2,3	3,8	2,2	11,0	12,1	7,2	9,4	8,0	7,5
0,55	80A4	1400	1,48	3,75	-	-	69,8	69,3	-	0,77	2,3	4,3	2,5	20,8	22,4	8,4	11,9	8,0	10,0
0,75	80B4	1400	1,92	5,12	IE1	72,1	72,1	71,3	-	0,78	2,4	4,6	2,6	25,4	27,0	9,9	13,4	7,1	15,0
0,92	80C4	1400	2,34	6,28	IE1	73,7	73,7	72,9	-	0,77	2,4	4,4	2,5	25,4	27,0	10,0	13,5	5,0	15,0
1,10	80D4	1410	2,64	7,45	IE1	75,0	75,1	75,5	-	0,80	2,7	4,8	2,8	29,9	31,5	11,4	14,9	5,0	15,0
1,10	90S4	1400	2,82	7,50	IE1	75,0	75,0	75,4	-	0,75	2,9	4,8	3,0	25,0	26,6	11,9	15,4	5,0	15,0
1,50	90LA4	1400	3,60	10,23	IE1	77,2	77,2	77,4	-	0,78	2,9	5,0	3,0	32,0	35,5	14,3	19,9	4,0	26,0
1,85	90LB4	1400	4,36	12,62	IE1	78,6	78,6	79,0	-	0,78	2,9	5,0	3,0	38,4	41,9	16,0	21,6	4,0	40,0
2,20	100LA4	1420	5,10	14,80	IE1	79,7	79,8	80,0	-	0,78	2,5	5,1	2,7	53,0	56,5	18,7	24,3	3,2	40,0
3,00	100LB4	1420	6,78	20,18	IE1	81,5	81,9	82,4	-	0,78	2,5	5,2	2,7	72,0	75,5	22,6	28,2	3,2	55,0
4,00	112MA4	1440	8,79	26,53	IE1	83,1	83,1	83,4	-	0,79	2,8	6,0	3,0	119,0	128,0	29,0	38,7	2,5	60,0
4,80	112MB4	1430	10,31	32,05	IE1	84,0	84,0	84,2	-	0,80	2,5	5,8	2,7	132,0	141,0	31,9	41,6	1,8	60,0
5,50	132S4	1450	11,72	36,22	IE1	84,7	84,7	85,0	-	0,80	2,4	5,5	2,5	240,0	250,0	41,7	52,0	1,8	100,0
7,50	132MA4	1450	15,72	49,39	IE1	86,0	86,1	86,3	-	0,80	2,6	5,7	2,6	330,0	353,0	52,0	66,7	1,2	150,0
9,20	132MB4	1450	18,87	60,59	IE1	86,9	86,9	87,0	-	0,81	2,8	5,8	2,7	391,6	414,6	58,2	72,9	1,1	150,0
11,00	132MC4	1440	21,84	72,95	IE1	87,6	87,6	87,8	-	0,83	2,7	5,6	2,8	417,4	440,4	62,6	77,3	0,9	150,0
11,00	160S4	1440	21,84	72,95	IE1	87,6	87,6	87,8	-	0,83	2,7	5,6	2,8	417,4	440,4	65,4	80,1	0,9	150,0

3.1 TS-TBS

4 Pole

460V 60Hz

P_n [kW]	Size	n_n [rpm]	I_n [A]	M_n [Nm]		η_n% (4/4) limit	η_n% (4/4)	η_n% (3/4)	η_n% (2/4)	$\cos\varphi_n$	$\frac{M_s}{M_n}$	$\frac{I_s}{I_n}$	$\frac{M_{max}}{M_n}$	$10^{-4}\times Kgm^2$		Kg		Z_0 [$10^3\times1/h$]	M_B [Nm]
														T T	T TB	T T	T TB		
0,09	56B4	1620	0,38	0,53	-	-	48,4	45,2	-	0,60	2,5	2,6	2,5	1,5	-	3,1	-	-	-
0,12	63A4	1670	0,44	0,69	-	-	52,1	50,6	-	0,65	3,1	2,8	3,0	2,4	3,0	3,6	5,1	12,5	1,8
0,18	63B4	1670	0,60	1,03	-	-	55,9	53,2	-	0,67	3,0	2,8	2,9	2,8	3,4	4,1	5,6	12,5	3,5
0,22	63C4	1670	0,77	1,26	-	-	57,9	58,1	-	0,62	3,0	2,8	2,9	2,8	3,4	4,2	5,7	10,0	3,5
0,25	63D4	1660	0,73	1,44	-	-	63,1	63,5	-	0,68	3,0	2,9	3,0	3,6	4,2	4,9	6,4	10,0	3,5
0,25	71A4	1720	0,70	1,39	-	-	63,0	63,3	-	0,71	2,9	3,8	2,9	7,8	8,9	5,4	7,6	10,0	5,0
0,37	71B4	1710	0,93	2,07	-	-	68,2	67,5	-	0,73	2,9	3,8	2,8	8,8	9,9	6,0	8,2	10,0	7,5
0,55	71C4	1700	1,35	3,09	-	-	69,2	69,0	-	0,74	2,9	3,8	2,8	11,0	12,1	7,2	9,4	8,0	7,5
0,55	80A4	1730	1,31	3,04	-	-	69,5	68,9	-	0,76	2,8	4,5	3,1	20,8	22,4	8,4	11,9	8,0	10,0
0,75	80B4	1730	1,66	4,14	-	-	73,5	71,6	-	0,77	2,9	4,8	3,2	25,4	27,0	9,9	13,4	7,1	15,0
0,92	80C4	1720	2,08	5,11	-	-	74,1	72,9	-	0,75	3,0	4,7	3,0	25,4	27,0	10,0	13,5	5,0	15,0
1,10	80D4	1730	2,33	6,07	-	-	75,9	73,4	-	0,78	3,2	5,1	3,2	29,9	31,5	11,4	14,9	5,0	15,0
1,10	90S4	1720	2,43	6,11	-	-	75,8	73,4	-	0,75	3,4	5,1	3,6	25,0	26,6	11,9	15,4	5,0	15,0
1,50	90LA4	1720	3,14	8,33	-	-	77,9	78,1	-	0,77	3,4	5,1	3,7	32,0	35,5	14,3	19,9	4,0	26,0
1,85	90LB4	1720	3,82	10,27	-	-	78,9	79,1	-	0,77	3,5	5,2	3,8	38,4	41,9	16,0	21,6	4,0	40,0
2,20	100LA4	1740	4,42	12,07	-	-	81,1	80,9	-	0,77	2,7	5,0	3,0	53,0	56,5	18,7	24,3	3,2	40,0
3,00	100LB4	1740	5,92	16,46	-	-	82,6	82,4	-	0,77	2,8	5,1	3,1	72,0	75,5	22,6	28,2	3,2	55,0
4,00	112MA4	1750	7,56	21,83	-	-	85,1	84,3	-	0,78	3,4	6,4	3,5	119,0	128,0	29,0	38,7	2,5	60,0
4,80	112MB4	1740	8,88	26,34	-	-	85,9	85,2	-	0,79	3,1	6,1	3,2	132,0	141,0	31,9	41,6	1,8	60,0
5,50	132S4	1750	10,15	30,01	-	-	86,1	85,6	-	0,79	2,9	5,8	3,0	240,0	250,0	41,7	52,0	1,8	100,0
7,50	132MA4	1750	13,65	40,93	-	-	87,3	86,9	-	0,79	3,1	5,9	3,2	330,0	353,0	52,0	66,7	1,2	150,0
9,20	132MB4	1750	16,63	50,20	-	-	87,9	87,3	-	0,79	3,1	6,0	3,2	391,6	414,6	58,2	72,9	1,1	150,0
11,00	132MC4	1740	19,28	60,37	-	-	88,4	87,6	-	0,81	2,9	5,8	3,0	417,4	440,4	62,6	77,3	0,9	150,0
11,00	160S4	1740	19,28	60,37	-	-	88,4	87,6	-	0,81	2,9	5,8	3,0	417,4	440,4	65,4	80,1	0,9	150,0

3.1 TS-TBS

6 Pole

400V 50Hz

P_n [kW]	Size	n_n [rpm]	I_n [A]	M_n [Nm]		η_n% (4/4) limit	η_n% (4/4)	η_n% (3/4)	η_n% (2/4)	$\cos\varphi_n$	$\frac{M_s}{M_n}$	$\frac{I_s}{I_n}$	$\frac{M_{max}}{M_n}$	$10^{-4}\times Kgm^2$		Kg		Z_0 [$10^3\times1/h$]	M_B [Nm]
														T T	T TB	T T	T TB		
0,09	63A6	860	0,49	1,00	-	-	42,1	39,3	-	0,63	2,1	2,0	2,1	3,6	4,2	5,0	6,5	12,5	3,5
0,12	63B6	860	0,68	1,33	-	-	43,1	40,0	-	0,59	2,2	2,0	2,2	3,6	4,2	5,1	6,6	12,5	3,5
0,15	63C6	810	0,80	1,77	-	-	42,1	39,2	-	0,64	2,0	2,0	2,0	3,6	4,2	5,1	6,6	11,8	3,5
0,18	71A6	900	0,62	1,91	-	-	59,3	59,9	-	0,71	2,0	2,7	2,0	9,3	10,4	5,2	7,4	11,2	5,0
0,25	71B6	900	0,80	2,65	-	-	63,4	63,8	-	0,71	2,2	3,2	2,2	12,0	13,1	6,0	8,2	11,2	7,5
0,37	71C6	880	1,12	4,00	-	-	64,2	64,4	-	0,74	2,0	3,1	2,0	14,8	15,9	6,8	9,0	10,0	7,5
0,37	80A6	940	1,18	3,80	-	-	66,3	64,0	-	0,68	2,6	4,1	2,6	25,4	27,0	9,6	13,0	9,5	10,0
0,55	80B6	930	1,75	5,60	-	-	66,8	64,2	-	0,68	2,7	4,1	2,8	29,9	31,5	11,1	14,6	9,0	15,0
0,75	80C6	920	2,21	7,80	-	-	70,0	67,2	-	0,70	2,7	4,0	2,7	29,9	31,5	11,3	14,8	7,1	15,0
0,75	90S6	920	2,31	7,80	-	-	70,0	67,5	-	0,67	2,7	3,6	2,7	28,1	29,7	12,9	16,4	7,1	13,0
1,10	90L6	930	3,30	11,30	-	-	72,9	71,1	-	0,66	2,9	4,1	2,9	38,4	41,9	15,9	21,5	5,3	26,0
1,50	100LA6	930	4,00	15,40	-	-	74,9	75,2	-	0,73	2,2	3,8	2,2	72,0	75,5	20,0	25,6	3,6	40,0
1,85	100LB6	930	4,90	19,00	-	-	75,1	75,5	-	0,73	2,2	3,6	2,2	88,0	91,5	24,0	29,6	3,2	40,0
2,20	112MA6	930	5,70	23,00	-	-	75,9	76,3	-	0,74	2,2	4,3	2,4	148,0	176,8	24,0	33,7	2,5	60,0
3,00	112MB6	930	7,20	31,00	-	-	77,3	77,8	-	0,78	2,1	4,9	2,4	188,0	216,8	30,5	40,2	2,5	60,0
3,00	132SA6	960	7,30	30,00	-	-	78,9	79,1	-	0,75	2,2	5,1	2,4	320,0	330,3	40,0	50,3	2,3	75,0
4,00	132MA6	960	9,60	40,00	-	-	79,4	78,8	-	0,76	2,1	5,6	2,5	380,0	402,5	46,4	61,1	1,5	100,0
5,50	132MB6	960	12,60	55,00	-	-	80,7	81,0	-	0,78	2,2	5,1	2,3	460,0	482,5	52,5	67,2	1,3	150,0

3.1 TS-TBS

6 Pole

460V 60Hz

P_n [kW]	Size	n_n [rpm]	I_n [A]	M_n [Nm]		η_n% (4/4) limit	η_n% (4/4)	η_n% (3/4)	η_n% (2/4)	$\cos\varphi_n$	$\frac{M_s}{M_n}$	$\frac{I_s}{I_n}$	$\frac{M_{max}}{M_n}$	$10^{-4}\times Kgm^2$		Kg		Z_0 [$10^3\times1/h$]	M_B [Nm]
														T T	T TB	T T	T TB		
0,09	63A6	1070	0,44	0,80	-	-	43,3	39,8	-	0,59	2,6	2,4	2,6	3,6	4,2	5,0	6,5	12,5	3,5
0,12	63B6	1080	0,62	1,06	-	-	44,3	40,7	-	0,55	2,8	2,4	2,8	3,6	4,2	5,1	6,6	12,5	3,5
0,15	63C6	1070	0,75	1,34	-	-	46,3	46,0	-	0,54	2,6	2,2	2,6	3,6	4,2	5,1	6,6	11,8	3,5
0,18	71A6	1130	0,57	1,52	-	-	63,4	63,8	-	0,63	2,4	3,2	2,4	9,3	10,4	5,2	7,4	11,2	5,0
0,25	71B6	1130	0,74	2,11	-	-	64,8	65,0	-	0,65	2,5	3,9	2,5	12,0	13,1	6,0	8,2	11,2	7,5
0,37	71C6	1100	0,99	3,20	-	-	65,2	64,9	-	0,72	2,2	3,7	2,2	14,8	15,9	6,8	9,0	10,0	7,5
0,37	80A6	1150	1,10	3,10	-	-	68,2	63,1	-	0,62	3,1	4,8	3,1	25,4	27,0	9,6	13,0	9,5	10,0
0,55	80B6	1150	1,59	4,60	-	-	68,8	64,1	-	0,63	3,1	4,8	3,2	29,9	31,5	11,1	14,6	9,0	15,0
0,75	80C6	1130	2,07	6,30	-	-	69,9	69,5	-	0,65	3,2	4,7	3,2	29,9	31,5	11,3	14,8	7,1	15,0
0,75	90S6	1130	2,24	6,30	-	-	68,8	68,4	-	0,61	3,2	4,3	3,3	28,1	29,7	12,9	16,4	7,1	13,0
1,10	90L6	1140	3,00	9,20	-	-	71,0	70,4	-	0,64	3,4	4,6	3,4	38,4	41,9	15,9	21,5	5,3	26,0
1,50	100LA6	1150	3,50	12,50	-	-	77,0	77,9	-	0,69	2,4	3,9	2,5	72,0	75,5	20,0	25,6	3,6	40,0
1,85	100LB6	1140	4,40	15,50	-	-	75,2	75,6	-	0,70	2,5	4,0	2,6	88,0	91,5	24,0	29,6	3,2	40,0
2,20	112MA6	1160	5,00	18,10	-	-	78,3	78,6	-	0,70	2,6	4,5	2,7	148,0	176,8	24,0	33,7	2,5	60,0
3,00	112MB6	1160	6,30	24,70	-	-	79,2	79,5	-	0,75	2,3	4,9	2,4	188,0	216,8	30,5	40,2	2,5	60,0
3,00	132SA6	1170	6,50	24,50	-	-	81,3	81,5	-	0,71	2,7	6,0	2,9	320,0	330,3	40,0	50,3	2,3	75,0
4,00	132MA6	1170	8,40	32,60	-	-	81,5	81,2	-	0,73	2,3	6,4	2,5	380,0	402,5	46,4	61,1	1,5	100,0
5,50	132MB6	1160	11,00	45,30	-	-	82,5	81,2	-	0,76	2,6	6,3	2,7	460,0	482,5	52,5	67,2	1,3	150,0

3.2 TH-TBH

2 Pole

400V 50Hz

P_n [kW]	Size	n_n [rpm]	I_n [A]	M_n [Nm]		η_n% (4/4) limit	η_n% (4/4)	η_n% (3/4)	η_n% (2/4)	$\cos\varphi_n$	$\frac{M_s}{M_n}$	$\frac{I_s}{I_n}$	$\frac{M_{max}}{M_n}$	10^{-4}×Kgm²		Kg		Z_0 [10^3×1/h]	M_B [Nm]
														T T	T TB	T T	T TB		
0,75	80A2	2840	1,64	2,52	IE2	77,4	78,8	79,3	77,1	0,84	3,4	6,4	3,3	13,5	15,1	10,0	13,5	3,0	10,0
1,10	80B2	2840	2,35	3,70	IE2	79,6	80,6	80,7	80,7	0,84	3,7	6,5	3,4	14,4	16,0	11,3	14,9	3,0	15,0
1,50	90S2	2870	3,16	4,99	IE2	81,3	81,5	81,2	81,2	0,84	3,8	7,4	3,8	16,8	18,4	14,2	17,7	2,5	13,0
2,20	90L2	2880	4,65	7,29	IE2	83,2	83,3	83,1	83,1	0,82	4,0	7,6	3,9	22,8	26,3	17,1	22,7	2,5	26,0
3,00	100L2	2900	6,09	9,88	IE2	84,6	84,6	83,5	80,5	0,84	4,0	8,2	4,1	43,2	46,7	23,6	29,2	1,5	40,0
4,00	112M2	2930	8,11	13,04	IE2	85,8	85,8	85,2	85,2	0,83	3,5	8,6	3,9	79,1	87,9	31,2	40,9	1,5	40,0
5,50	132SA2	2940	10,85	17,86	IE2	87,0	87,1	86,4	83,7	0,84	3,0	8,0	3,7	141,0	151,0	43,0	53,3	1,2	75,0
7,50	132SB2	2930	14,29	24,44	IE2	88,1	88,1	87,6	85,4	0,86	3,4	8,1	3,8	178,0	188,0	49,0	59,3	1,1	75,0
9,20	132M2	2930	16,97	29,99	IE2	88,8	88,9	88,9	88,9	0,88	3,7	8,2	3,9	216,0	239,0	56,3	71,0	1,0	100,0

2 Pole

460V 60Hz

P_n [kW]	Size	n_n [rpm]	I_n [A]	M_n [Nm]		η_n% (4/4) limit	η_n% (4/4)	η_n% (3/4)	η_n% (2/4)	$\cos\varphi_n$	$\frac{M_s}{M_n}$	$\frac{I_s}{I_n}$	$\frac{M_{max}}{M_n}$	10^{-4}×Kgm²		Kg		Z_0 [10^3×1/h]	M_B [Nm]
														T T	T TB	T T	T TB		
0,75	80A2	3470	1,44	2,06	IE2	75,5	79,8	78,1	75,4	0,82	3,7	6,9	3,7	13,5	15,1	10,0	13,5	3,0	10,0
1,10	80B2	3460	2,03	3,04	IE2	82,5	82,9	81,5	78,2	0,82	4,1	7,3	4,0	14,4	16,0	11,3	14,9	3,0	15,0
1,50	90S2	3490	2,70	4,10	IE2	84,0	84,0	83,0	80,7	0,83	4,2	8,5	4,1	16,8	18,4	14,2	17,7	2,5	13,0
2,20	90L2	3490	3,94	6,02	IE2	85,5	85,5	84,1	81,9	0,82	4,4	8,8	4,4	22,8	26,3	17,1	22,7	2,5	26,0
3,00	100L2	3520	5,18	8,14	IE2	87,5	87,5	85,9	83,1	0,83	4,5	9,5	4,7	43,2	46,7	23,6	29,2	1,5	40,0
4,00	112M2	3540	6,90	10,79	IE2	87,5	87,7	86,1	83,9	0,83	4,1	9,5	4,5	79,1	87,9	31,2	40,9	1,5	40,0
5,50	132SA2	3540	9,29	14,84	IE2	88,5	88,5	87,2	84,3	0,84	4,0	9,1	4,7	141,0	151,0	43,0	53,3	1,2	75,0
7,50	132SB2	3530	12,37	20,29	IE2	89,5	89,5	88,9	85,8	0,85	4,2	9,2	4,7	178,0	188,0	49,0	59,3	1,1	75,0
9,20	132M2	3530	14,78	24,89	IE2	89,5	89,8	89,0	86,1	0,87	4,3	9,2	4,8	216,0	239,0	56,3	71,0	1,0	100,0

3.2 TH-TBH

4 Pole

400V 50Hz

P_n [kW]	Size	n_n [rpm]	I_n [A]	M_n [Nm]		η_n% (4/4) limit	η_n% (4/4)	η_n% (3/4)	η_n% (2/4)	$\cos\varphi_n$	M_s/M_n	I_s/I_n	M_{max}/M_n	10^{-4}×Kgm²		Kg		Z_0 [10^3×1/h]	M_B [Nm]
														T T	T TB	T T	T TB		
0,75	80B4	1430	1,79	5,01	IE2	79,6	79,6	79,7	75,8	0,76	3,0	5,8	3,2	31,8	33,4	11,6	15,1	7,1	15,0
1,10	90S4	1430	2,53	7,35	IE2	81,4	81,5	81,7	77,9	0,77	3,2	5,7	3,2	32,5	36,0	14,2	17,7	5,0	13,0
1,50	90L4	1420	3,49	10,09	IE2	82,8	82,8	82,4	79,3	0,75	3,5	5,9	3,5	38,4	41,9	16,3	21,9	4,0	26,0
2,20	100LA4	1430	5,02	14,69	IE2	84,3	84,3	84,7	83,3	0,75	3,0	5,7	3,2	76,3	80,5	21,0	28,0	3,2	40,0
3,00	100LB4	1430	6,75	20,03	IE2	85,5	85,5	85,8	84,2	0,75	3,1	5,7	3,2	88,9	92,7	24,0	31,0	3,2	40,0
4,00	112M4	1450	8,51	26,34	IE2	86,6	87,0	87,2	85,7	0,78	3,2	6,8	3,4	137,0	146,0	32,1	41,8	2,5	60,0
5,50	132S4	1460	11,14	35,97	IE2	87,7	88,0	88,4	87,3	0,81	2,6	6,5	3,1	288,0	298,0	47,0	57,3	1,8	100,0
7,50	132MA4	1460	15,24	49,06	IE2	88,7	88,8	89,2	88,0	0,80	2,7	6,7	3,2	388,0	411,0	58,8	73,2	1,2	150,0
9,20	132MB4	1460	19,04	60,18	IE2	89,3	89,4	89,6	88,2	0,78	2,7	6,1	3,0	413,0	436,0	63,0	77,0	1,1	150,0

4 Pole

460V 60Hz

P_n [kW]	Size	n_n [rpm]	I_n [A]	M_n [Nm]		η_n% (4/4) limit	η_n% (4/4)	η_n% (3/4)	η_n% (2/4)	$\cos\varphi_n$	M_s/M_n	I_s/I_n	M_{max}/M_n	10^{-4}×Kgm²		Kg		Z_0 [10^3×1/h]	M_B [Nm]
														T T	T TB	T T	T TB		
0,75	80B4	1750	1,56	4,09	IE2	82,5	82,5	81,9	79,7	0,73	3,4	6,9	3,7	31,8	33,4	11,6	15,1	7,1	15,0
1,10	90S4	1750	2,25	6,00	IE2	84,0	84,0	83,5	80,0	0,73	3,8	6,6	3,8	32,5	36,0	14,2	17,7	5,0	13,0
1,50	90L4	1740	3,11	8,23	IE2	84,0	84,0	83,6	80,9	0,72	4,1	6,9	4,0	38,4	41,9	16,3	21,9	4,0	26,0
2,20	100LA4	1740	4,44	12,07	IE2	87,5	87,5	87,1	85,1	0,71	3,6	6,6	3,7	76,3	80,5	21,0	28,0	3,2	40,0
3,00	100LB4	1740	6,05	16,46	IE2	87,5	87,7	87,3	85,4	0,71	3,7	6,6	3,7	88,9	92,7	24,0	31,0	3,2	40,0
4,00	112M4	1760	7,58	21,70	IE2	87,5	88,3	87,8	86,6	0,75	3,6	7,5	3,9	137,0	146,0	32,1	41,8	2,5	60,0
5,50	132S4	1760	9,75	29,84	IE2	89,5	89,6	88,9	87,8	0,79	3,1	7,6	3,5	288,0	298,0	47,0	57,3	1,8	100,0
7,50	132MA4	1760	13,39	40,69	IE2	89,5	90,1	89,1	88,0	0,78	3,1	7,7	3,6	388,0	411,0	58,8	73,2	1,2	150,0
9,20	132MB4	1760	16,84	49,92	IE2	89,5	90,2	89,8	88,3	0,76	3,2	7,6	3,6	413,0	436,0	63,0	77,0	1,1	150,0

3.2 TH-TBH

6 Pole — 400V 50Hz

P_n [kW]	Size	n_n [rpm]	I_n [A]	M_n [Nm]		η_n% (4/4) limit	η_n% (4/4)	η_n% (3/4)	η_n% (2/4)	$\cos\varphi_n$	M_s/M_n	I_s/I_n	M_{max}/M_n	$10^{-4}\times Kgm^2$		Kg		Z_0 [$10^3\times1/h$]	M_B [Nm]
														T T	T TB	T T	T TB		
0,75	90S6	940	2,10	7,62	IE2	75,9	75,9	75,3	72,1	0,68	2,2	3,9	2,4	45,0	46,6	13,6	17,0	7,1	13,0
1,10	90L6	940	3,03	11,18	IE2	78,1	78,1	77,6	73,7	0,67	2,4	4,0	2,5	70,5	74,0	20,4	26,0	5,3	26,0
1,50	100L6	940	3,77	15,24	IE2	79,8	79,8	79,6	76,2	0,72	3,0	5,0	2,9	91,6	95,1	24,8	30,4	3,6	40,0
2,20	112M6	960	5,18	21,88	IE2	81,8	81,8	81,6	80,0	0,75	2,2	5,7	2,7	202,0	231,0	30,9	40,6	2,8	40,0
3,00	132S6	970	6,66	29,53	IE2	83,3	85,5	85,9	84,9	0,76	2,5	6,2	2,5	384,0	394,0	47,4	57,7	2,3	75,0
4,00	132MA6	970	8,87	39,38	IE2	84,6	86,8	87,0	86,3	0,75	2,5	6,2	2,6	456,0	479,0	53,5	68,2	1,5	75,0
5,50	132MB6	970	12,20	54,15	IE2	86,0	87,9	88,6	87,5	0,74	2,5	6,1	2,6	562,0	585,0	61,7	76,4	1,3	100,0

6 Pole — 460V 60Hz

P_n [kW]	Size	n_n [rpm]	I_n [A]	M_n [Nm]		η_n% (4/4) limit	η_n% (4/4)	η_n% (3/4)	η_n% (2/4)	$\cos\varphi_n$	M_s/M_n	I_s/I_n	M_{max}/M_n	$10^{-4}\times Kgm^2$		Kg		Z_0 [$10^3\times1/h$]	M_B [Nm]
														T T	T TB	T T	T TB		
0,75	90S6	1150	1,84	6,23	IE2	80,0	80,0	77,4	74,1	0,64	2,4	4,4	2,6	45,0	46,6	13,6	17,0	7,1	13,0
1,10	90L6	1150	2,56	9,13	IE2	85,5	85,5	80,6	73,0	0,63	2,7	4,7	2,9	70,5	74,0	20,4	26,0	5,3	26,0
1,50	100L6	1150	3,15	12,46	IE2	86,5	86,5	81,2	75,3	0,69	3,5	6,3	3,4	91,6	95,1	24,8	30,4	3,6	40,0
2,20	112M6	1170	4,44	17,96	IE2	87,5	87,5	83,1	77,2	0,71	2,5	6,5	3,1	202,0	231,0	30,9	40,6	2,8	40,0
3,00	132S6	1170	5,86	24,49	IE2	87,5	88,0	87,3	83,8	0,73	2,8	6,8	2,9	384,0	394,0	47,4	57,7	2,3	75,0
4,00	132MA6	1170	7,84	32,65	IE2	87,5	88,9	88,7	86,2	0,72	2,8	6,9	3,0	456,0	479,0	53,5	68,2	1,5	75,0
5,50	132MB6	1170	10,86	44,89	IE2	89,5	89,5	89,1	86,9	0,71	2,9	6,8	3,1	562,0	585,0	61,7	76,4	1,3	100,0

3.3 TP-TBP

2 Pole

400V 50Hz

P_n [kW]	Size	n_n [rpm]	I_n [A]	M_n [Nm]		η_n% (4/4) limit	η_n% (4/4)	η_n% (3/4)	η_n% (2/4)	$\cos\varphi_n$	$\frac{M_s}{M_n}$	$\frac{I_s}{I_n}$	$\frac{M_{max}}{M_n}$	10^{-4}×Kgm²		Kg		Z_0 [10^3×1/h]	M_B [Nm]
														T T	T TB	T T	T TB		
0,75	80A2	2860	1,58	2,50	IE3	80,7	81,8	82,3	80,9	0,84	3,2	6,1	3,3	13,5	15,1	10,0	13,5	3,0	10,0
1,10	80B2	2860	2,31	3,67	IE3	82,7	84,0	85,0	84,3	0,82	3,4	7,0	3,2	14,4	16,0	11,3	14,9	3,0	15,0
1,50	90S2	2860	3,27	5,01	IE3	84,2	84,8	84,2	82,0	0,78	4,7	6,5	4,0	16,8	18,4	15,3	18,8	2,5	13,0
2,20	90L2	2880	4,78	7,29	IE3	85,9	86,2	85,9	83,6	0,77	4,7	7,2	4,3	22,8	26,3	18,3	23,9	2,5	26,0
3,00	100L2	2900	6,06	9,88	IE3	87,1	87,2	86,7	83,9	0,82	4,3	8,9	4,6	43,2	46,7	23,9	29,5	1,5	40,0
4,00	112M2	2930	8,23	13,04	IE3	88,1	88,8	88,7	86,8	0,79	4,0	9,2	4,6	79,1	87,9	32,9	42,7	1,5	40,0
5,50	132S2	2950	10,60	17,80	IE3	89,2	90,2	90,0	88,0	0,83	4,3	9,5	4,8	178,0	188,0	49,0	59,3	1,2	75,0
7,50	132M2	2950	14,16	24,28	IE3	90,1	91,0	90,9	89,1	0,84	3,7	8,2	3,9	216,0	239,0	56,3	71,0	1,0	100,0

2 Pole

460V 60Hz

P_n [kW]	Size	n_n [rpm]	I_n [A]	M_n [Nm]		η_n% (4/4) limit	η_n% (4/4)	η_n% (3/4)	η_n% (2/4)	$\cos\varphi_n$	$\frac{M_s}{M_n}$	$\frac{I_s}{I_n}$	$\frac{M_{max}}{M_n}$	10^{-4}×Kgm²		Kg		Z_0 [10^3×1/h]	M_B [Nm]
														T T	T TB	T T	T TB		
0,75	80A2	3490	1,41	2,05	IE3	77,0	81,6	81,7	78,9	0,82	3,8	7,8	3,7	13,5	15,1	10,0	13,5	3,0	10,0
1,10	80B2	3490	2,04	3,01	IE3	84,0	84,7	84,6	83,3	0,80	4,3	8,4	4,0	14,4	16,0	11,3	14,9	3,0	15,0
1,50	90S2	3490	2,90	4,10	IE3	85,5	85,5	84,8	81,9	0,76	5,8	8,4	4,8	16,8	18,4	15,3	18,8	2,5	13,0
2,20	90L2	3510	4,15	5,99	IE3	86,5	86,5	85,4	82,6	0,77	6,2	9,3	5,1	22,8	26,3	18,3	23,9	2,5	26,0
3,00	100L2	3520	5,32	8,14	IE3	88,5	88,5	87,2	84,8	0,80	4,9	10,3	5,8	43,2	46,7	23,9	29,5	1,5	40,0
4,00	112M2	3550	7,16	10,76	IE3	88,5	88,8	88,1	85,3	0,79	5,3	10,8	6,0	79,1	87,9	32,9	42,7	1,5	40,0
5,50	132S2	3550	9,40	14,80	IE3	89,5	89,6	88,5	85,4	0,82	5,5	11,1	5,9	178,0	188,0	49,0	59,3	1,2	75,0
7,50	132M2	3530	12,37	20,29	IE3	90,2	90,6	88,6	86,2	0,84	4,3	11,5	5,6	216,0	239,0	56,3	71,0	1,1	75,0

3.3 TP-TBP

4 Pole

400V 50Hz

P_n [kW]	Size	n_n [rpm]	I_n [A]	M_n [Nm]		η_n% (4/4) limit	η_n% (4/4)	η_n% (3/4)	η_n% (2/4)	$\cos\varphi_n$	$\frac{M_s}{M_n}$	$\frac{I_s}{I_n}$	$\frac{M_{max}}{M_n}$	10^{-4}×Kgm²		Kg		Z_0 [10^3×1/h]	M_B [Nm]
														T T	T TB	T T	T TB		
0,75	80B4	1440	1,67	4,97	IE3	82,5	82,9	82,5	80,0	0,78	3,2	6,1	3,5	38,1	39,7	13,2	16,7	7,1	15,0
1,10	90S4	1430	2,41	7,35	IE3	84,1	84,5	84,6	82,6	0,78	3,2	6,2	3,4	42,3	45,8	17,7	21,2	5,0	13,0
1,50	90L4	1430	3,20	10,02	IE3	85,3	85,6	85,6	83,0	0,79	3,3	6,5	3,4	48,0	51,5	19,7	25,3	4,0	26,0
2,20	100LA4	1440	4,57	14,59	IE3	86,7	86,9	86,9	85,2	0,80	3,3	7,5	3,7	88,9	92,7	24,0	31,0	3,2	40,0
2,20	112MR4	1460	4,64	14,39	IE3	86,7	88,9	88,4	86,2	0,77	4,0	9,0	4,3	137,0	146,0	32,1	41,8	2,5	40,0
3,00	112MS4	1450	6,16	19,76	IE3	87,7	87,8	88,0	86,7	0,80	3,5	7,9	3,5	137,0	146,0	33,0	43,0	2,5	40,0
4,00	112M4	1450	8,35	26,34	IE3	88,6	88,7	88,7	87,2	0,78	3,4	7,7	3,7	155,0	164,0	35,0	45,0	2,5	60,0
5,50	132MS4	1470	11,08	35,73	IE3	89,6	89,6	89,6	87,9	0,80	3,8	8,2	3,9	388,0	411,0	61,0	75,0	1,8	100,0
7,50	132M4	1460	15,16	49,06	IE3	90,4	90,4	90,6	89,5	0,79	3,5	6,9	3,3	413,0	436,0	64,0	78,0	1,1	150,0

4 Pole

460V 60Hz

P_n [kW]	Size	n_n [rpm]	I_n [A]	M_n [Nm]		η_n% (4/4) limit	η_n% (4/4)	η_n% (3/4)	η_n% (2/4)	$\cos\varphi_n$	$\frac{M_s}{M_n}$	$\frac{I_s}{I_n}$	$\frac{M_{max}}{M_n}$	10^{-4}×Kgm²		Kg		Z_0 [10^3×1/h]	M_B [Nm]
														T T	T TB	T T	T TB		
0,75	80B4	1750	1,49	4,09	IE3	83,5	85,5	82,8	79,8	0,74	3,8	7,2	4,0	38,1	39,7	13,2	16,7	7,1	15,0
1,10	90S4	1750	2,13	6,00	IE3	86,5	86,5	85,6	82,8	0,75	3,8	7,6	3,8	42,3	45,8	17,7	21,2	5,0	13,0
1,50	90L4	1750	2,82	8,19	IE3	86,5	86,6	85,7	82,7	0,77	3,8	7,8	4,2	48,0	51,5	19,7	25,3	4,0	26,0
2,20	112MR4	1770	4,11	11,87	IE3	89,5	89,5	88,6	85,9	0,75	5,0	10,9	5,6	137,0	146,0	32,1	41,8	2,5	40,0
3,00	112MS4	1760	5,39	16,28	IE3	89,5	89,5	88,8	86,8	0,78	4,1	9,5	4,7	137,0	146,0	33,0	43,0	2,5	40,0
4,00	112M4	1760	7,48	21,70	IE3	89,5	89,5	89,0	87,0	0,75	3,8	9,1	4,5	155,0	164,0	35,0	45,0	2,5	60,0
5,50	132MS4	1770	9,65	29,67	IE3	91,7	91,7	90,2	88,3	0,78	4,2	9,7	4,6	388,0	411,0	61,0	75,0	1,8	100,0
7,50	132M4	1760	13,33	40,69	IE3	91,7	91,7	91,0	89,4	0,77	3,9	7,9	3,9	413,0	436,0	64,0	78,0	1,1	150,0

3.3 TP-TBP

6 Pole

400V 50Hz

P_n [kW]	Size	n_n [rpm]	I_n [A]	M_n [Nm]		η_n% (4/4) limit	η_n% (4/4)	η_n% (3/4)	η_n% (2/4)	$\cos\varphi_n$	$\frac{M_s}{M_n}$	$\frac{I_s}{I_n}$	$\frac{M_{max}}{M_n}$	10^{-4}×Kgm²		Kg		Z_0 [10^3×1/h]	M_B [Nm]
														T T	T TB	T T	T TB		
0,75	90S6	940	1,85	7,62	IE3	78,9	78,9	79,0	74,9	0,74	2,5	5,0	2,7	65,0	66,6	15,4	18,8	7,1	26,0
1,10	100LR6	950	2,73	11,06	IE3	81,0	82,0	82,2	80,8	0,71	2,6	5,1	2,8	88,0	91,5	22,7	27,9	4,0	26,0
1,50	100L6	940	3,69	15,24	IE3	82,5	82,6	83,2	81,0	0,71	2,7	4,9	2,9	91,6	95,1	24,8	30,4	3,6	40,0
2,20	112M6	960	5,09	21,88	IE3	84,3	84,3	84,5	81,8	0,74	2,3	6,1	2,9	229,0	258,0	34,0	44,0	2,8	40,0
3,00	132S6	970	6,70	29,53	IE3	85,6	86,2	87,2	86,5	0,75	2,5	6,1	2,7	384,0	394,0	46,0	57,0	2,3	75,0
4,00	132MA6	970	8,95	39,38	IE3	86,8	87,2	88,0	88,2	0,74	2,5	6,6	2,9	456,0	479,0	53,5	68,2	1,5	75,0
5,50	132MB6	970	12,15	54,15	IE3	88,0	88,3	88,6	87,7	0,74	2,7	6,4	2,9	562,0	585,0	61,7	76,4	1,3	100,0

3.4 S

4 Pole

230V 50Hz

Pn [kW]	Size	n_n [rpm]	I_n 230V [A]	M_n [Nm]	η_n%	$\cos\varphi_n$	C_r [µF]	$\frac{M_s}{M_n}$	$\frac{I_s}{I_n}$	$\frac{M_{max}}{M_n}$	J_T [10^{-4}×Kgm^2]	W_T [Kg]
0,12	63A4	1420	1,30	0,81	48,0	0,88	6,3	0,8	2,7	2,4	2,8	4,2
0,18	63B4	1400	1,60	1,23	57,0	0,90	8,0	0,8	2,8	1,9	3,5	4,8
0,25	71A4	1340	2,10	1,78	59,0	0,94	10,0	0,7	2,7	1,7	8,6	5,9
0,37	71B4	1360	2,80	2,60	61,0	0,95	14,0	0,7	2,9	1,6	10,8	6,7
0,55	80A4	1400	3,80	3,75	64,0	0,98	20,0	0,7	3,7	1,9	25,0	10,1
0,75	80B4	1400	5,10	5,12	65,0	0,98	25,0	0,6	3,6	1,9	31,0	11,5
1,10	90S4	1370	7,70	7,67	69,0	0,91	30,0	0,5	3,2	1,7	30,0	13,5
1,50	90L4	1350	9,30	10,61	72,0	0,96	40,0	0,5	3,0	1,6	38,0	16,5
2,20	100LA4	1400	13,20	15,01	72,0	0,95	60,0	0,5	3,0	1,5	72,0	22,8

3.5 HSE

4 Pole

230V 50Hz

Pn [kW]	Size	n_n [rpm]	I_n [A]	M_n [Nm]	η_n%	$\cos\varphi_n$	C_r / C_s [µF]	$\frac{M_s}{M_n}$	$\frac{I_s}{I_n}$	$\frac{M_{max}}{M_n}$	J_T [10^{-4}×Kgm^2]	W_T [Kg]
0,12	63A4	1420	1,30	0,81	48,0	0,88	6,3 / 12,5	2,4	3,3	2,4	2,8	4,2
0,18	63B4	1400	1,60	1,23	57,0	0,90	8 / 16	2,3	3,2	1,9	3,5	4,8
0,25	71A4	1340	2,10	1,78	59,0	0,94	10 / 20	2,5	3,0	1,7	8,6	5,9
0,37	71B4	1360	2,80	2,60	61,0	0,95	14 / 25	2,3	3,2	1,6	10,8	6,7
0,55	80A4	1400	3,80	3,75	64,0	0,98	20 / 40	2,4	4,2	1,9	25,0	10,1
0,75	80B4	1400	5,10	5,12	65,0	0,98	25 / 50	2,3	4,0	1,9	31,0	11,5
1,10	90S4	1370	7,70	7,67	69,0	0,91	30 / 80	2,3	3,4	1,7	30,0	13,5
1,50	90L4	1350	9,30	10,61	72,0	0,96	40 / 120	2,3	3,9	1,6	38,0	16,5
2,20	100LA4	1400	13,20	15,01	72,0	0,95	60 / 140	2,1	3,4	1,5	72,0	22,8

3.6 D-DB

2/4 Pole - Dahlander YY/Δ

400V 50Hz

P_n [kW]	Size	n_n [rpm]	I_n [A]	M_n [Nm]	η_n%	$\cos\varphi_n$	M_s/M_n	I_s/I_n	M_{max}/M_n	$10^{-4}\times Kgm^2$		Kg		Z_0 [$10^3\times1/h$]	M_B [Nm]
										T D	T DB	T D	T DB		
0,18 / 0,12	63A2/4	2800 / 1370	0,55 / 0,55	0,62 / 0,83	60 / 50	0,77 / 0,65	1,5 / 1,4	3,4 / 2,5	1,7 / 1,7	2,8	3,4	4,2	5,7	4,0 / 6,3	1,0
0,20 / 0,15	63B2/4	2790 / 1370	0,64 / 0,66	0,70 / 1,05	62 / 51	0,80 / 0,64	3,0 / 2,7	4,0 / 2,6	3,1 / 2,8	2,8	3,4	4,2	5,7	3,4 / 5,8	3,0
0,25 / 0,18	63C2/4	2820 / 1380	0,70 / 0,70	0,85 / 1,25	63 / 54	0,82 / 0,70	2,4 / 2,3	3,5 / 2,6	2,5 / 2,4	3,5	4,1	4,8	6,5	2,8 / 5,3	3,0
0,25 / 0,18	71A2/4	2850 / 1420	0,70 / 0,60	0,84 / 1,23	64 / 62	0,80 / 0,70	2,0 / 1,9	4,2 / 3,6	2,1 / 2,0	7,2	8,3	5,3	7,5	2,8 / 5,3	5,0
0,37 / 0,25	71B2/4	2810 / 1420	0,98 / 0,78	1,25 / 1,70	66 / 64	0,86 / 0,75	2,2 / 2,1	4,7 / 4,0	2,3 / 2,2	8,6	9,7	5,9	8,1	2,8 / 5,3	5,0
0,55 / 0,37	71C2/4	2790 / 1390	1,3 / 1,1	1,88 / 2,55	69 / 67	0,88 / 0,78	2,0 / 1,9	4,5 / 3,7	2,1 / 2,0	10,8	11,9	6,7	8,9	2,3 / 4,2	5,0
0,60 / 0,45	80A2/4	2800 / 1410	1,75 / 1,25	2,1 / 3,1	58 / 64	0,87 / 0,82	1,7 / 1,7	3,6 / 4,1	1,8 / 2,0	19,0	20,6	8,7	12,2	2,3 / 4,2	5,0
0,80 / 0,60	80B2/4	2830 / 1410	1,95 / 1,5	2,7 / 4,0	68 / 70	0,89 / 0,84	1,8 / 1,8	4,6 / 4,6	1,9 / 1,9	25,0	26,6	10,1	13,6	2,0 / 3,5	10,0
1,10 / 0,75	80C2/4	2850 / 1420	2,7 / 1,9	3,7 / 5,1	68 / 70	0,90 / 0,86	1,7 / 1,9	4,3 / 5,0	1,9 / 2,0	31,0	32,6	11,3	14,8	1,6 / 2,8	10,0
1,4 / 1,1	90S2/4	2800 / 1390	3,7 / 2,9	4,8 / 7,6	69 / 72	0,79 / 0,78	2,5 / 2,3	4,4 / 4,8	2,6 / 2,4	29,0	30,6	13,5	17,0	1,2 / 2,0	13,0
1,7 / 1,3	90LA2/4	2830 / 1390	3,8 / 3,0	5,7 / 8,9	73 / 71	0,89 / 0,86	2,3 / 2,1	4,8 / 4,3	2,4 / 2,1	32,0	35,5	14,5	20,1	1,1 / 1,9	26,0
2,2 / 1,5	90LB2/4	2850 / 1420	5,0 / 3,5	7,4 / 10,3	72 / 74	0,84 / 0,80	2,3 / 2,6	4,8 / 5,3	2,4 / 2,6	39,0	42,5	16,5	22,1	1,0 / 1,7	26,0
2,3 / 1,8	100LA2/4	2870 / 1420	5,5 / 4,2	7,6 / 12,2	73 / 74	0,84 / 0,80	2,4 / 2,4	6,3 / 4,6	2,5 / 2,7	53,0	56,5	19,1	24,7	1,0 / 1,7	26,0
3,0 / 2,2	100LB2/4	2870 / 1420	6,9 / 5,2	10,0 / 14,7	74 / 75	0,85 / 0,80	2,1 / 2,2	5,4 / 5,1	2,6 / 2,4	64,0	67,5	21,2	26,8	0,8 / 1,3	40,0
3,3 / 2,6	100LC2/4	2860 / 1420	7,5 / 6,0	10,8 / 17,3	74 / 75	0,86 / 0,81	2,1 / 2,0	5,4 / 4,5	2,6 / 2,4	72,0	75,5	22,8	28,4	0,7 / 1,2	40,0
4,0 / 3,0	112MA2/4	2800 / 1420	9,0 / 6,6	13,7 / 20,2	74 / 78	0,85 / 0,84	2,5 / 2,5	5,2 / 5,8	2,6 / 2,6	90,0	98,8	25,0	34,7	0,7 / 1,2	60,0
4,8 / 3,6	112MB2/4	2870 / 1420	10,0 / 7,7	16,0 / 24,2	79 / 81	0,87 / 0,84	2,1 / 2,1	6,1 / 5,0	2,8 / 2,4	110,0	118,8	29,4	39,1	0,6 / 1,1	60,0
6,0 / 4,5	132SA2/4	2880 / 1440	12,5 / 10,0	20,0 / 29,9	80 / 82	0,88 / 0,81	2,0 / 2,0	6,2 / 4,7	2,4 / 2,4	240,0	250,3	42,3	52,6	0,5 / 0,8	75,0
7,5 / 5,8	132SB2/4	2890 / 1440	16,7 / 12,8	24,6 / 38,3	77 / 80	0,86 / 0,82	2,5 / 2,5	5,8 / 4,7	2,6 / 2,6	307,0	317,3	50,2	60,5	0,4 / 0,7	100,0
9,2 / 7,0	132MA2/4	2900 / 1440	18,8 / 14,8	29,9 / 45,9	81 / 83	0,86 / 0,82	2,5 / 2,6	7,6 / 5,2	2,6 / 2,7	350,0	373,0	54,8	69,5	0,4 / 0,7	100,0
11,0 / 8,5	132MB2/4	2920 / 1460	24,0 / 17,0	35,7 / 55,8	82 / 86	0,81 / 0,83	2,2 / 2,2	7,9 / 5,8	2,3 / 2,3	389,0	412,0	59,4	74,1	0,4 / 0,7	150,0

2/8 Pole - Separate windings Y/Y

400V 50Hz

P_n [kW]	Size	n_n [rpm]	I_n [A]	M_n [Nm]	η_n%	$\cos\varphi_n$	M_s/M_n	I_s/I_n	M_{max}/M_n	$10^{-4}\times Kgm^2$		Kg		Z_0 [$10^3\times1/h$]	M_B [Nm]
										T D	T DB	T D	T DB		
0,18 / 0,045	71A2/8	2890 / 710	0,58 / 0,42	0,61 / 0,61	57 / 28	0,82 / 0,60	2,0 / 2,6	4,5 / 2,0	2,1 / 2,7	7,2	8,3	5,3	7,5	7,5 / 19	2,5
0,25 / 0,06	71B2/8	2890 / 700	0,75 / 0,50	0,85 / 0,84	65 / 35	0,80 / 0,53	2,0 / 2,4	4,8 / 2,0	2,1 / 2,5	8,6	9,7	5,9	8,1	7,1 / 17	2,5
0,37 / 0,09	71C2/8	2880 / 680	1,05 / 0,70	1,23 / 1,27	64 / 32	0,82 / 0,53	2,1 / 2,5	4,9 / 2,1	2,2 / 2,6	10,8	11,9	6,7	8,9	6,0 / 14	5,0
0,55 / 0,12	80B2/8	2900 / 720	1,60 / 0,78	1,83 / 1,63	64 / 37	0,81 / 0,63	2,1 / 2,0	5,0 / 2,4	2,2 / 2,2	25,0	26,6	10,1	13,6	2,7 / 11,2	5,0
0,75 / 0,18	80C2/8	2900 / 710	1,95 / 0,92	2,5 / 2,4	68 / 44	0,86 / 0,63	1,8 / 1,6	5,3 / 2,5	2,0 / 1,9	31,1	32,7	11,7	15,2	2,4 / 10	10,0
0,90 / 0,20	90S2/8	2840 / 680	2,30 / 0,95	3,0 / 2,8	68 / 44	0,86 / 0,68	1,6 / 1,3	4,4 / 2,1	2,1 / 1,6	25,0	26,6	12,0	15,5	1,9 / 9,0	10,0
1,1 / 0,25	90L2/8	2890 / 690	2,70 / 1,25	3,6 / 3,5	72 / 45	0,83 / 0,64	2,6 / 1,8	5,8 / 2,2	2,7 / 2,0	32,0	35,5	14,5	20,1	1,7 / 7,5	13,0
1,5 / 0,37	100LA2/8	2890 / 710	3,9 / 1,8	4,9 / 4,8	70 / 48	0,85 / 0,58	2,1 / 1,6	5,4 / 2,5	2,5 / 1,9	53,0	56,5	19,1	24,7	1,6 / 5,6	26,0
2,2 / 0,55	100LB2/8	2900 / 710	5,1 / 2,7	7,3 / 7,5	75 / 52	0,87 / 0,59	2,3 / 1,7	6,5 / 2,5	2,5 / 1,9	72,0	75,5	22,8	28,4	1,4 / 4,5	26,0
3,0 / 0,75	112M2/8	2920 / 710	6,5 / 3,4	10,0 / 10,1	78 / 59	0,87 / 0,52	2,4 / 1,8	7,0 / 2,6	2,2 / 2,7	120,0	128,8	30,5	40,2	1,3 / 4,0	40,0
4,0 / 1,1	132S2/8	2920 / 710	8,9 / 4,5	13,0 / 14,8	75 / 62	0,86 / 0,57	2,6 / 2,1	5,2 / 2,9	2,7 / 2,2	240,0	250,3	42,3	52,6	1,1 / 3,1	50,0
5,5 / 1,5	132M2/8	2940 / 720	11,5 / 5,7	18,0 / 20,1	83 / 69	0,87 / 0,56	2,8 / 2,3	5,6 / 2,7	2,9 / 2,5	330,0	352,5	52,5	67,2	0,8 / 2,5	50,0

3.6 D-DB

4/8 Pole - Dahlander YY/Δ

400V 50Hz

P_n [kW]	Size	n_n [rpm]	I_n [A]	M_n [Nm]	η_n%	$\cos\varphi_n$	$\frac{M_s}{M_n}$	$\frac{I_s}{I_n}$	$\frac{M_{max}}{M_n}$	$10^{-4}\times Kgm^2$		Kg		Z_0 [$10^3\times1/h$]	M_B [Nm]
										T D	T DB	T D	T DB		
0,18 / 0,11	71B4/8	1380 / 690	0,53 / 0,72	1,27 / 1,55	59 / 35	0,84 / 0,60	1,7 / 2,1	3,4 / 2,2	2,2 / 2,5	12,0	13,1	6,0	8,2	4,2 / 7,5	3,5
0,25 / 0,15	71C4/8	1370 / 670	0,72 / 0,89	1,76 / 2,10	60 / 38	0,78 / 0,57	1,7 / 1,9	3,4 / 2,1	2,1 / 2,4	14,8	15,9	6,8	9,0	4,0 / 6,7	5,0
0,30 / 0,18	80A4/8	1390 / 700	0,76 / 0,85	2,1 / 2,5	66 / 50	0,88 / 0,64	1,6 / 1,7	3,9 / 2,2	1,9 / 2,1	22,0	23,6	9,3	12,7	4,0 / 6,7	5,0
0,40 / 0,25	80B4/8	1390 / 690	1,05 / 1,15	2,8 / 3,5	68 / 50	0,85 / 0,61	1,6 / 1,5	3,6 / 1,9	1,8 / 1,8	28,0	29,6	10,9	14,4	3,8 / 6,5	10,0
0,55 / 0,30	80C4/8	1390 / 700	1,3 / 1,3	3,8 / 4,1	69 / 54	0,89 / 0,65	1,6 / 2,1	4,1 / 3,1	2,4 / 3,0	31,0	32,6	11,7	15,2	3,2 / 5,6	10,0
0,75 / 0,40	90S4/8	1400 / 700	1,70 / 1,75	5,1 / 5,5	75 / 58	0,86 / 0,56	1,5 / 2,1	4,6 / 2,9	2,5 / 2,5	45,0	46,5	13,1	16,6	3,1 / 5,3	13,0
1,0 / 0,55	90L4/8	1390 / 700	2,4 / 2,4	7,5 / 7,5	75 / 58	0,88 / 0,58	1,5 / 2,3	3,8 / 3,2	2,1 / 2,8	60,0	63,5	16,0	21,6	2,8 / 4,8	13,0
1,25 / 0,7	100LA4/8	1420 / 710	2,7 / 3,0	8,5 / 9,5	75 / 58	0,88 / 0,56	1,9 / 2,4	5,5 / 3,2	2,2 / 2,6	72,0	75,5	20,0	25,6	1,9 / 3,3	26,0
1,6 / 0,9	100LB4/8	1420 / 710	3,5 / 3,8	10,8 / 12,1	77 / 60	0,88 / 0,56	2,0 / 2,6	5,5 / 3,3	2,4 / 2,8	91,0	94,5	24,0	29,6	1,8 / 3,0	26,0
2,3 / 1,2	112MA4/8	1410 / 710	5,0 / 4,5	15,6 / 15,9	74 / 67	0,88 / 0,57	1,3 / 1,7	4,4 / 3,8	2,1 / 2,5	115,0	122,2	23,9	33,6	1,7 / 2,8	40,0
3,0 / 1,5	112MB4/8	1420 / 720	6,2 / 5,5	20,5 / 20,2	78 / 70	0,89 / 0,55	1,7 / 2,2	5,5 / 4,1	2,1 / 2,5	140,0	148,8	28,9	38,6	1,7 / 2,8	40,0
3,8 / 2,1	132SA4/8	1430 / 720	8,2 / 7,6	25,3 / 27,8	77 / 71	0,86 / 0,57	1,5 / 2,1	5,0 / 4,2	1,9 / 2,2	330,0	340,3	42,0	52,3	1,4 / 2,3	75,0
4,5 / 2,4	132SB4/8	1440 / 720	9,6 / 9,0	30,1 / 31,7	80 / 71	0,86 / 0,52	1,6 / 2,4	5,4 / 4,1	1,9 / 2,4	380,0	390,3	46,4	56,7	1,2 / 2,1	75,0
5,2 / 3,0	132MA4/8	1430 / 720	10,3 / 10,9	34,2 / 39,6	82 / 73	0,86 / 0,54	1,7 / 2,4	6,3 / 4,1	2,3 / 2,4	430,0	453,0	52,5	67,2	1,0 / 1,7	100,0
6,0 / 3,7	132MB4/8	1440 / 720	12,6 / 12,5	39,7 / 48,8	80 / 70	0,88 / 0,60	1,7 / 2,2	6,0 / 4,1	2,2 / 2,2	510,0	533,0	59,4	74,1	0,95 / 1,6	100,0

4.1 DIMENSIONS

4.1.1 General dimensions

B5

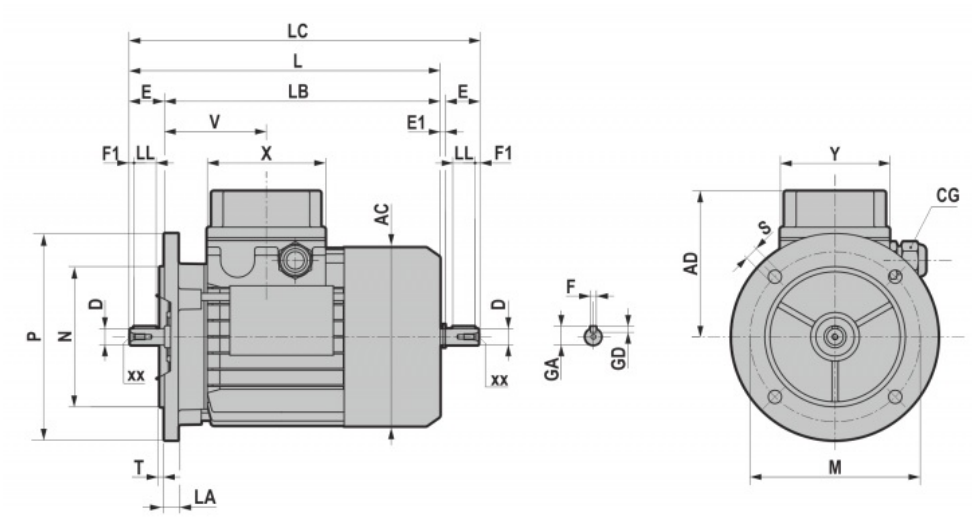

B14

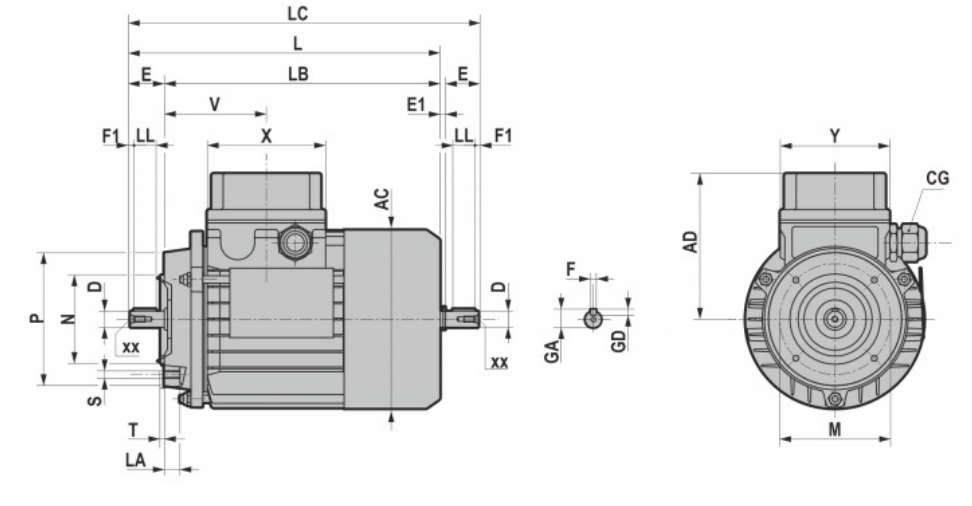

B3

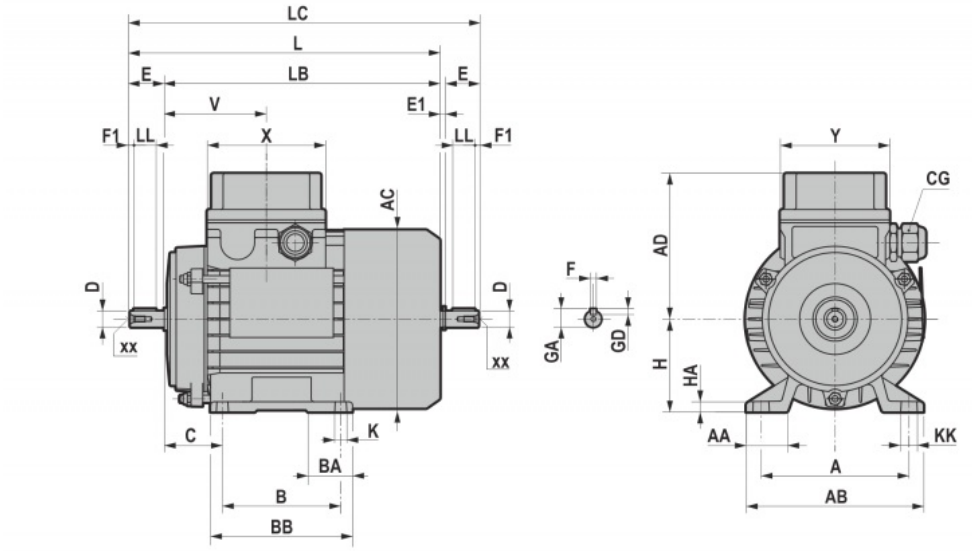

4.1 DIMENSIONS

	AC	AD	L	LB	X	Y	V	LC
56	106	95	197	177	93	93	55	-
63	121	104	211	188	80	74	70	235,5
71	139	112	238,5	208,5	80	74	74,5	271
80	158	121,5	272,5 *(295,5)	232,5 *(255,5)	80	74	78	314 *(337)
90S	173	146	298 *(331)	248 *(281)	98	98	87	349,5 *(380,5)
90L	173	146	323 *(356)	273 *(306)	98	98	87	374,5 *(407,5)
100	191	154,5	368	308	98	98	97,5	431,5
112	210,5	169,5	383,5 *(407,5)	322,5 *(347,5)	98	98	100	447 *(472)
132S	248,5	195	453	372	118	118	115,5	536,5
132M	248,5	195	490	410	118	118	115,5	574,5
160S	248,5	195	520	410	118	118	115,5	-

*TP80B4, TP90S4, TP90L4, TP90S6, TP112M4, TP112M6

	Shaft end						Key			Cable gland		
	D	E	E1	xx	F1	GA	F	GD	LL	CG	Ø hollow min	Ø hollow max
56	9	20	-	M4x12	3,5	10	3	3	14	M16x1,5	5	10
63	11 j6	23	1,5	M4x10	2,5	12,5	4	4	15	M16x1.5	5	10
71	14 j6	30	2,5	M5x12.5	3	16	5	5	20	M20x1.5	6	12
80	19 j6	40	1,5	M6x16	5	21,5	6	6	30	M20x1.5	6	12
90S	24 j6	50	1,5	M8x19	5	27	8	7	35	M25x1.5	13	18
90L	24 j6	50	1,5	M8x19	5	27	8	7	35	M25x1.5	13	18
100	28 j6	60	3,5	M10x22	7,5	31	8	7	45	M25x1.5	13	18
112	28 j6	60	3,5	M10x22	7,5	31	8	7	45	M25x1.5	13	18
132S	38 k6	80	4	M12x28	10	41	10	8	60	M32x1.5	18	25
132M	38 k6	80	4	M12x28	10	41	10	8	60	M32x1.5	18	25
160S	42 k6	110	-	M16x36	10	45	12	8	90	M32x1.5	18	25

B5	M	N	P	LA	S	T
56	100	80	120	9	7	3
63	115	95	140	10	9	3
71	130	110	160	10	9,5	3,5
80	165	130	200	12	11	3,5
90	165	130	200	12	11	3,5
100	215	180	250	15	14	4
112	215	180	250	14,5	14	4
132	265	230	300	20	14	3,5
160	300	250	350	13	18,5	3,5

B14	M	N	P	LA	S	T
56	65	50	80	9	M5	3
63	75	60	90	10	M5	2,5
71	85	70	105	10,5	M6	2,5
80	100	80	120	10,5	M6	3
90	115	95	140	11,5	M8	3
100	130	110	160	15	M8	3,5
112	130	110	160	11,5	M8	3,5
132	165	130	200	20,5	M10	3,5

B3	A	AA	AB	KK	B	BB	BA	K	C	H	HA
56	91	25,5	111	10	71	90	18	7	37	56	10
63	100	44	120	12	80	108	25	7,5	40	63	9
71	112	44	132	12	90	108	25	7,5	44	71	9
80	125	56,5	156	19,5	100	122	26	9,5	49	80	11
90S	140	56	172	12	100	136	33	8,5	54	90	11
90L	140	57	172	12	125	155	33	8,5	54	90	13
100	160	64	192	20	140	170	37	8,5	62	100	14
112	190	76	221	21	140	175	40	8,5	69	112	14
132S	216	84	260	22	140	175	40	10,5	87	132	16
132M	216	85	260	22	180	210	40	10,5	87	132	16

4.1 DIMENSIONS

4.1.2 S series

63 - 71 - 80

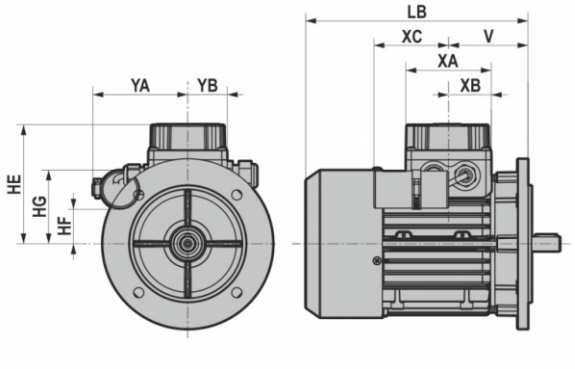

90 - 100

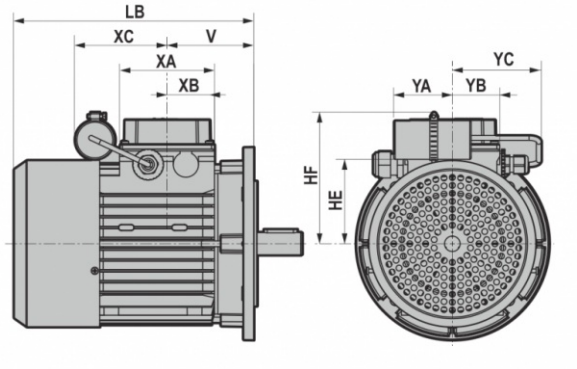

	V	YA	YB	YC	HE	HF	HG	XA	XB	XC
63A4	69	86	37	-	104	29	62	80	40	60
63B4	69	89	37	-	104	28	62	80	40	60
71A4	75	89	37	-	112	32	70	80	40	60
71B4	75	89	37	-	112	32	70	80	40	60
80A4	78	94	37	-	122	39	81	80	40	70
80B4	78	94	37	-	122	39	81	80	40	73
90S4	89,5	60	49	90	146	136	-	98	49	96
90L4	89,5	67	49	90	146	141	-	98	49	123
100LA4	89,5	80	49	90	155	150	-	98	49	138

4.1 DIMENSIONS

4.1.3 HSE series

63 - 71 - 80 | **90 - 100**

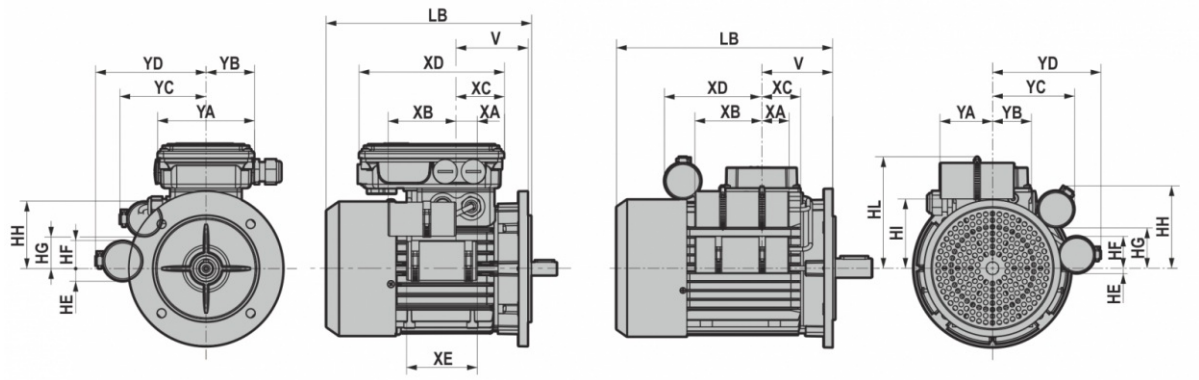

	V	YA	YB	YC	HE	HF	HG	XA	XB	XC
63A4	69	86	37	-	104	29	62	80	40	60
63B4	69	89	37	-	104	28	62	80	40	60
71A4	75	89	37	-	112	32	70	80	40	60
71B4	75	89	37	-	112	32	70	80	40	60
80A4	78	94	37	-	122	39	81	80	40	70
80B4	78	94	37	-	122	39	81	80	40	73
90S4	89,5	60	49	90	146	136	-	98	49	96
90L4	89,5	67	49	90	146	141	-	98	49	123
100LA4	89,5	80	49	90	155	150	-	98	49	138

	V	YA	YB	YC	YD	HE	HF	HG	HH	HI	HL	XA	XB	XC	XD	XE
63A4	69	110	54	86	98	16	21	29	63	-	-	25	60	50	153	70
63B4	69	110	54	89	98	16	21	27	66	-	-	25	60	50	153	70
71A4	74,5	110	54	89	114	13	29	32	69	-	-	22	70	50	153	73
71B4	74,5	110	54	89	114	13	29	32	69	-	-	22	70	50	153	73
80A4	78	110	54	94	128	18	29	39	81	-	-	30	70	50	153	95
80B4	78	110	54	94	128	18	29	39	81	-	-	45	72	50	153	120
90S4	89,5	60	49	-	148	12	45	-	-	86,5	136	51	69	49	96	-
90L4	89,5	67	49	104	137	7	40	51	104	86,5	141	35	85	49	123	-
100LA4	97,5	80	49	103	157	10	47	58	113	96	150	31	89	49	138	-

4.1 DIMENSIONS

4.1.4 Incremental standard encoder

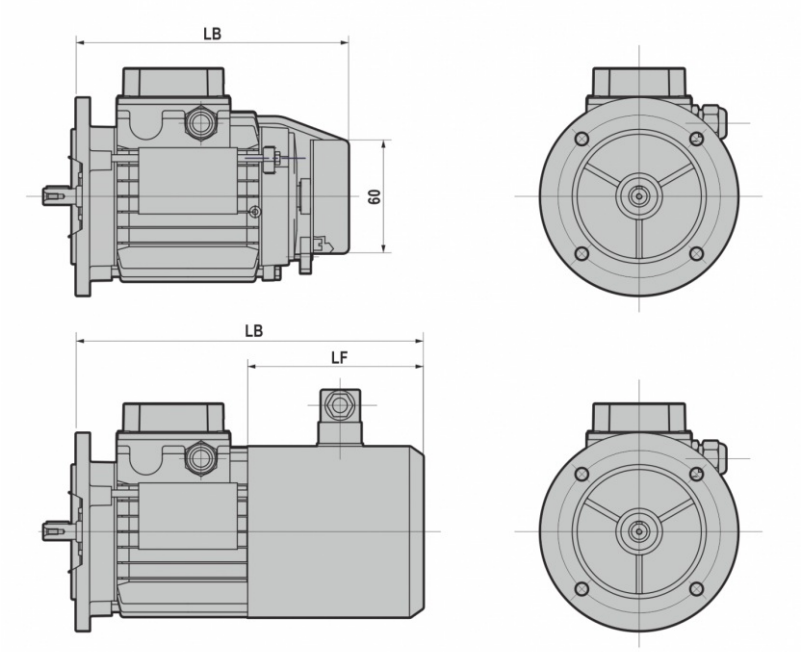

		LB	LF
63	IC410	210	/
	IC411	247	124,5
	IC416	280	158
71	IC410	226	/
	IC411	254	118
	IC416	296	160
80	IC410	245 *(268)	/
	IC411	305 *(328)	152 *(175)
	IC416	338 *(361)	185 *(208)
90S	IC410	255 *(288)	/
	IC411	325 *(358)	166 *(199)
	IC416	341 *(374)	182 *(215)
90L	IC410	280 *(313)	/
	IC411	350 *(383)	166 *(199)
	IC416	366 *(399)	182 *(215)

		LB	LF
100	IC410	308	/
	IC411	389,5	183
	IC416	437	230
112	IC410	321 *(346)	/
	IC411	420 *(445)	201 *(226)
	IC416	450 *(475)	230 *(255)
132S	IC410	360	/
	IC411	463	212
	IC416	490	240
132M	IC410	398	/
	IC411	501	212
	IC416	528	240
160S	IC410	398	/
	IC411	501	212
	IC416	528	240

* TP80B4,TP90S4, TP90L4, TP90S6, TP112M4, TP112M6

IC410 = NON-VENTILATED
IC411 = SELF-VENTILATED
IC416 = FORCED VENTILATED

4.1.5 Brake motors

B5

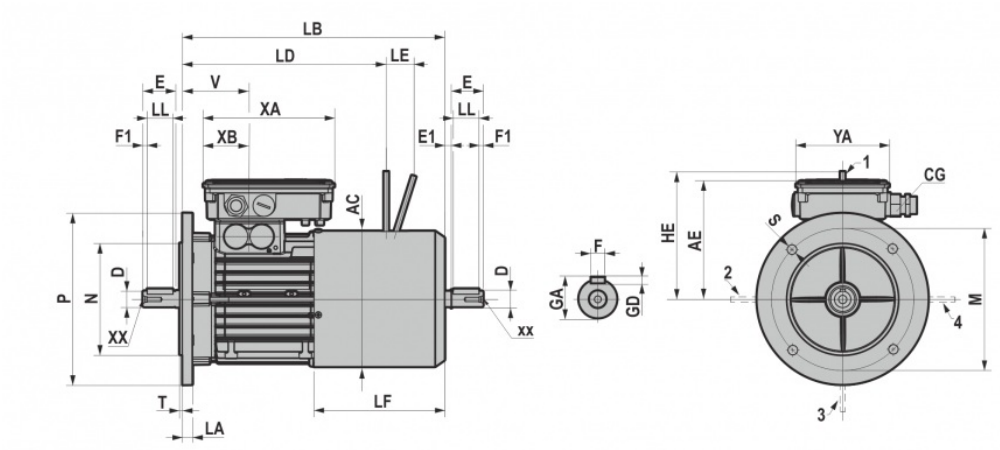

B14

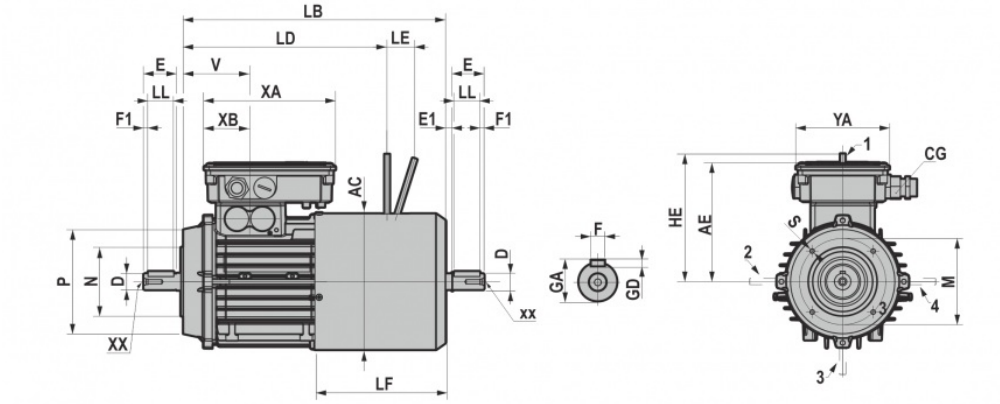

B3

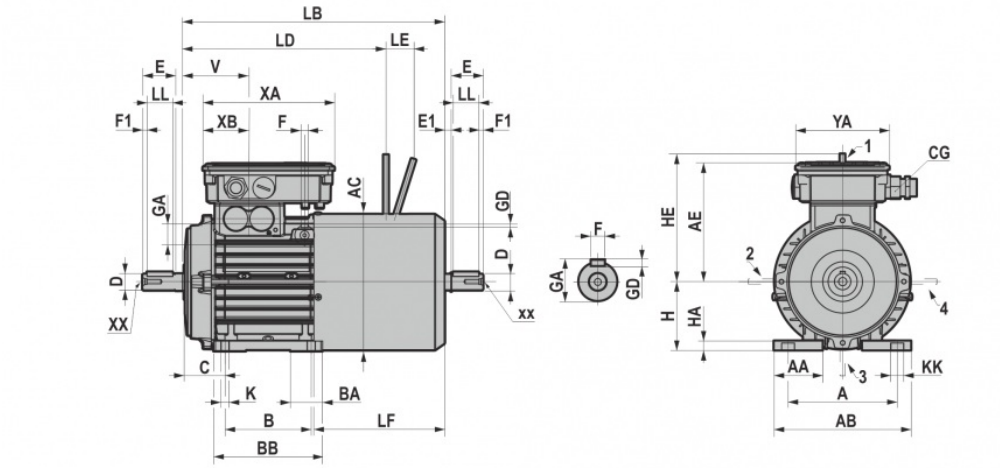

4.1 DIMENSIONS

		Cable gland					
	Brake Power supply	Pg	Ø hollow min	Ø hollow max	XA	XB	YA
63	AC / DC	M16x1.5	5	10	153	54	109
71							
80							
90	AC / DC	M20x1.5	6	12	206	66,5	132
100							
112							
132	AC / DC	M20x1.5	6	12	206	66,5	132
160							

		LD	LE	HE	LB	LF	AE	V
63	MS	192	21	116	249	124,5	118	69
	FM	192	17,5	96	249	124,5	118	69
	ML	-	-	-	203	72	118	69
71	MS	211,5	23	124	276	137	127	74,5
	FM	214	19	101,5	276	137	127	74,5
	ML	182	18	103	225	80	127	74,5
80	MS	238 *(259)	23	134	304 *(326)	152 *(174)	136	78
	FM	237 *(258)	22,5	129	304 *(326)	152 *(174)	136	78
	ML	203	22	128	248	84	136	78
90S	MS	252,5 *(297)	27,5	160	324,5 *(372)	166 *(213)	165	89,5
	FM	255 *(300)	28	159,5	324,5 *(372)	166 *(213)	165	89,5
	ML	212,5	22	128	261	90	165	89,5
90L	MS	279 *(324)	28	160	349,5 *(396)	166 *(212)	165	89,5
	FM	279 *(324)	27,5	159,5	349,5 *(396)	166 *(212)	165	89,5
	ML	237,5	22	128	285	90	165	89,5
100	MS	307	28	160	389,5	183	174	97,5
	FM	307	27,5	159,5	389,5	183	174	97,5
	ML	267	26	148	325	105	174	97,5
112	MS	330 *(358)	34,5	198	419 *(446)	201 *(227)	189	100
	FM	326 *(353)	35	199	419 *(446)	201 *(227)	189	100
	ML	281	26	148	325	95	189	100
132S	MS	364	34,5	200	461,5	212	225	113
	FM	359	35,5	204	461,5	212	225	113
	ML	317,5	30	172	395	133	225	113
132M	MS	404,5	37,5	217	513,5	212	225	113
	FM	403,5	39	226	513,5	212	225	113
	ML	355,5	30	172	434	133	225	113
160S	MS	404,5	37,5	217	513,5	212	225	113
	FM	403,5	39	226	513,5	212	225	113
	ML	355,5	30	172	434	133	225	113

* TBP80B4,TBP90S4, TBP90L4, TBP90S6, TBP112M4, TBP112M6 (for versions TBP ML brake is not expected).

4.1.6 Double brake

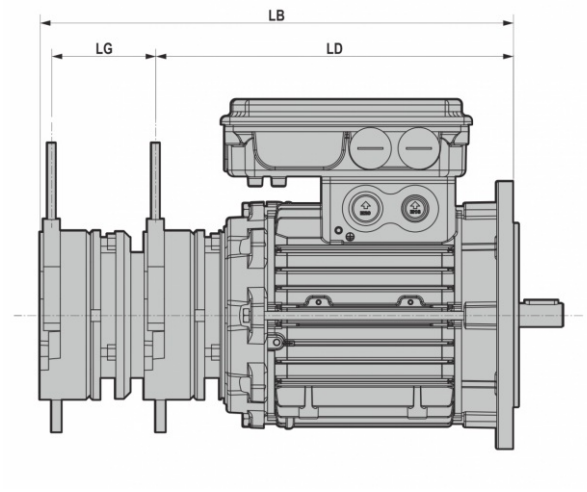

	LB	LD	LG
63	255,5	193,5	58
71	283	214	63
80	317,5 *(341)	235 *(258,5)	73
090S	343 *(390)	252 *(299)	81
090L	368 *(415)	277 *(324)	81
100	396	307	81
112	428 *(456)	325 *(353)	89
132S	463	359	89
132M	516	403.5	96
160S	516	403.5	96

*TBP80B4, TBP90S4, TBP90L4, TBP90S6, TBP112M4, TBP112M6

For other dimensions, refer to the dimensional charts for the brake motors.

4.1.7 Brake motors with incremental encoder

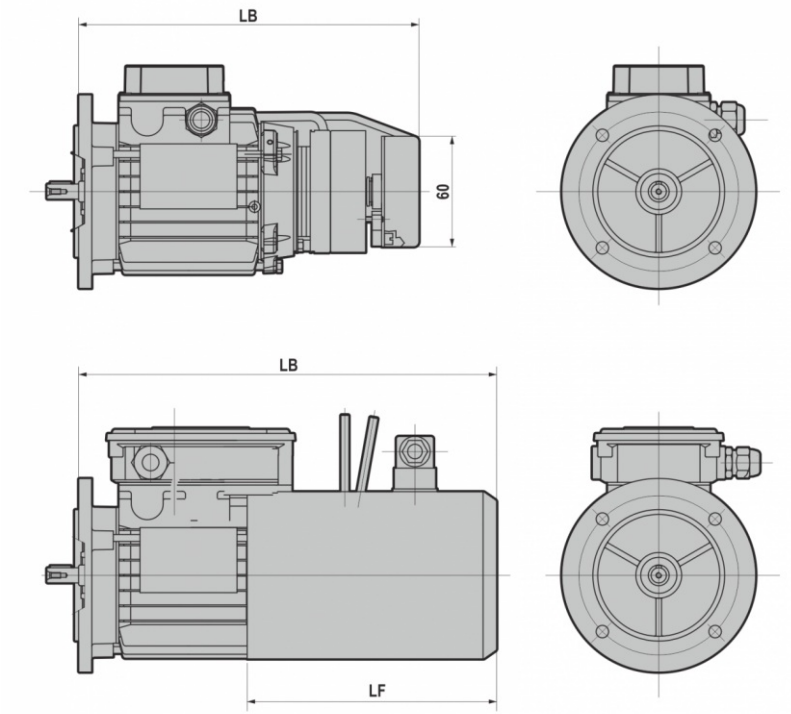

	LF	LB (IC411 - IC416)	LB (IC410)
63	198	320	254
71	199	336	283
80	235 *(257)	388 *(410)	311 *(334)
90S	242 *(289,5)	401 *(448,5)	334 *(381)
90L	242 *(288,5)	426 *(472,5)	359 *(406)
100	293	505,5	380
112	288 *(315)	507 *(534)	410 *(438,5)
132S	294	545	448
132L	294	583	486
160	292	583	486

*TBP80B4, TBP90S4, TBP90L4, TBP90S6, TBP112M4, TBP112M6

Note: Version with incremental encoder available only with MS and FM brakes.

4.1.8 Forced ventilation

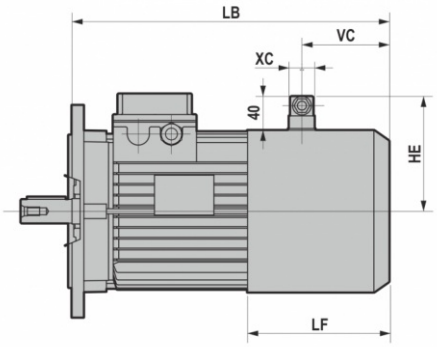

~1 Single-phase execution

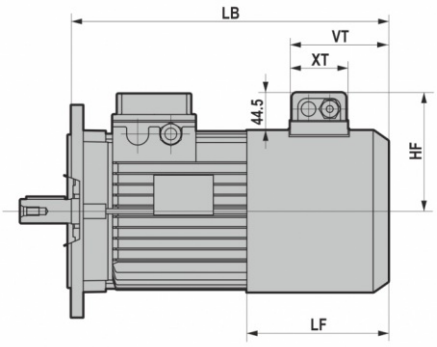

~3 Execution three-phase

1 = standard (T-D-S series) 2 = brake motor (TB-DB-SB series)

		LB	LF
63	1	239	117
	2	311,5	190
71	1	254,5	118
	2	331	195
80	1	295,5 *(318,5)	143 *(166)
	2	382 *(404)	230 *(252)
90S	1	308 *(341)	149 *(182)
	2	398,5 *(446)	240 *(287,5)
90L	1	333 *(366)	149 *(182)
	2	423,5 *(470)	240 *(286,5)
100	1	407	200
	2	500	293
112	1	419 *(444)	201 *(226)
	2	532 *(559)	313 *(340)
132S	1	461	212
	2	568,5	319
132M	1	499	212
	2	620,5	319
160S	1	499	212
	2	620,5	319

		HE	VC	XC	HF	VT	XT
63	~1	100,5	59	30	-	-	-
71		109,5	64	30	-	-	-
80		119	78	30	-	-	-
90		126,5	87	30	-	-	-
100		135,5	103	30	-	-	-
112		145	95	30	-	-	-
132		169	109	68	-	-	-
160		169	109	68	-	-	-
100	~3	-	-	-	140	158	75
112		-	-	-	150	158	75
132		-	-	-	159	158	75
160		-	-	-	159	158	75

*TP/TBP80B4, TP/TBP90S4, TP/TBP90L4, TP/TBP90S6, TP/TBP112M4, TP/TBP112M6

4.1.9 Position of terminal box-Release lever-Forced ventilation connector

Unless otherwise specified when ordering, the moto is supplied with terminal box/release lever/forced ventilation connector in position 1.
Position of the release lever with respect to position of terminal box.

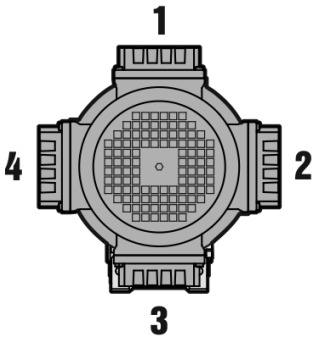

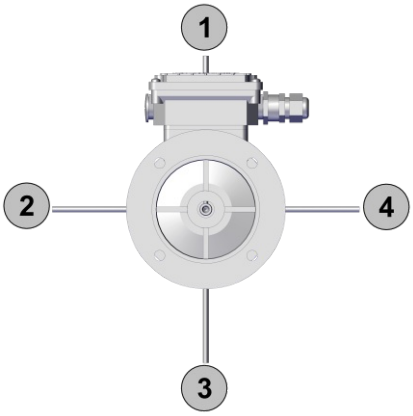

4.1.10 Version with rain cover

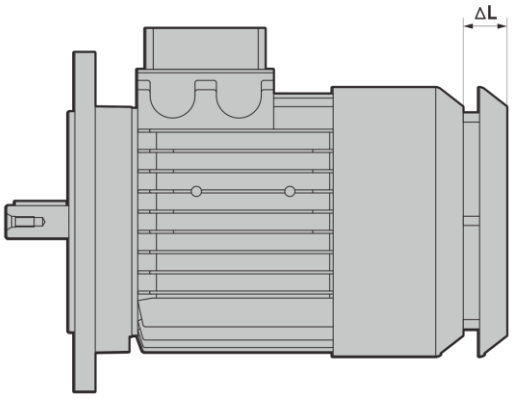

	ΔL (T)	ΔL (P)
63	11	20
71	15	20
80	11	22
90	14	23
100	19	25
112	19	30
132	19	35
160	19	35

(T) = Textile roof
(P) = Rain guard roof

5.1 OPTIONAL CONSTRUCTIONS - ACCESSORIES

- B35 (B3+B5)
- B34 (B3+B14)
- Reduced B5 flange
- Reduced shaft end
- Second shaft end
- Rear hexagon
- Protection rating IP65, IP56, IP66
- Insulation class H
- Condensation drain holes
- Condensation heater (110V - 230V)
- Low temperature construction
- High temperature construction
- Bimetal cutout – NC contact (130°C for class F / 140°C for class F UL/CSA / 150°C for class H)
- PTC thermistors (130°C for class F / 150°C for class H)
- Single-phase motor with balanced winding
- Single-phase motor, high starting torque with electronic cutout (HSE series motors)
- Rain cover roof
- Textile roof
- Backstop device (sizes 80/90/100/112/132/160S)
- Rapid connection (HARTING)
- Motor without ventilation (IC410)
- Single-phase forced ventilation kit (up to size 132/160S inclusive)
- Three-phase forced ventilation kit (from size 100 inclusive)
- Incremental encoder without connector
- Incremental encoder with connector
- Low resolution incremental encoder (without connector)
- Single-phase forced ventilation kit (up to size 132/160S inclusive) for encoder version
- Three-phase forced ventilation kit (from size 100 inclusive) for encoder version
- Motor paint job
- Optional power voltages (see respective section)
- 9 terminal construction for 1 pole three-phase motors (230V/460V 60Hz)
- Motor construction to UL/CSA (TS, TH, TP, TBS, TBH, TBP and D series only)
- Motor constructions to ATEX II 3GD (TS, TH, TP, D and S series only)
- Motor constructions to CCC (TS, TH series only)

5.1 OPTIONAL CONSTRUCTIONS - ACCESSORIES

With FM brake:

- Separate power
- Special brake coil voltage (*)
- Manual release lever
- Hexagonal machining on non-drive shaft end
- Brake motor to IP55
- Brake motor to IP56
- Brake motor to IP65
- Brake motor to IP66
- Motor with double brake
- Anti-seizing stainless steel washer
- Microswitch
- Silent brake
- Inertial flywheel (gradual braking/starting)
- Double-ended shaft
- Half-wave fast detachment rectifier SBR (from sizes 63 to 100)
- Single-phase forced ventilation kit (up to size 132/160S inclusive)
- Three-phase forced ventilation kit (from size 100 inclusive)
- Incremental encoder without connector
- Incremental encoder with connector
- Low resolution incremental encoder (without connector, sizes 63-71-80-90)
- Single-phase forced ventilation kit (up to size 132/160S inclusive) for encoder version
- Three-phase forced ventilation kit (from size 100 inclusive) for encoder version
- Motor paint job

With ML brake:

- Separate power
- Special brake voltage (*)
- Manual release lever
- Motor paint job

With MS brake:

- Separate power
- Special brake coil voltage (*)
- Manual release lever
- Hexagonal machining on non-drive shaft end
- Brake motor to IP55- IP65
- Anti-seizing stainless steel washer
- Double-ended shaft
- Single-phase forced ventilation kit (up to size 132/160S inclusive)
- Three-phase forced ventilation kit (from size 100 inclusive)
- Incremental encoder without connector
- Incremental encoder with connector
- Low resolution incremental encoder (without connector, sizes 63-71-80-90)
- Single-phase forced ventilation kit (up to size 132/160S inclusive) for encoder version
- Three-phase forced ventilation kit (from size 100 inclusive) for encoder version
- Motor paint job

(*) Standard brake coil voltages

- FM - ML brakes: 103V DC for TBS and TBH / 178V DC for DB
- MS brake: 230/400V/50Hz

6.1 SALES CONDITIONS

All supplies effected by Motovario are governed exclusively by the general terms of sale that you can find on our website:

http://www.motovario.com/eng/corporate/sales-conditions

M / IEC / STD / EN / REV.0 / 2019