TECHNICAL CATALOGUE

I SERIES

COAXIAL **GEARED**MOTORS

STANDARD **IEC**

PUJOL

a **TECO Group** company

INDEX

1. GENERAL INFORMATION

1.1 SYMBOLS AND FORMULAS 3
1.1.1 Symbols 3
1.1.2 Formulas 4
1.2 PRODUCT SELECTION 5
1.3 SERVICE FACTOR 6
1.4 INSTALLATION 7

2. PRODUCT INFORMATION

2.1 DESIGN FEATURES 8
2.2 TYPOLOGY 9
2.2.1 Designation 9
2.2.2 Versions 10
2.2.3 Modularity 11
2.3 MOUNTING POSITIONS 12
2.3.1 Mounting positions 12
2.3.2 Position of terminal box 13
2.4 CRITICAL APPLICATIONS 14
2.4.1 Critical applications 14
2.4.2 Information 14
2.5 MOTOR FLANGE AVAILABILITY 15
2.6 OUTPUT SHAFT BEARINGS 16
2.7 RADIAL LOAD 17
2.7.1 Information 17
2.7.2 Input 17
2.7.3 Output 18
2.8 LUBRICATION 19
2.8.1 Information 19
2.8.2 Lubricants 19
2.8.3 Special lubricants 20
2.8.4 Quantity 21

3. DIMENSIONS

3.1 REDUCERS/GEARED MOTORS 22
3.1.1 IPC... 22
3.1.2 IBC... 23
3.1.3 IP... 24
3.1.4 IB... 25

3.2 ELECTRIC MOTORS 26
3.2.1 Electric motors 26
3.2.2 Standard high efficiency (TS), high (TH, SH, HSH) and premium (TP) motors 28
3.2.3 Nominal power - [kW] 29

3.3 WEIGHTS 30

3.4 SHAFT END 31

4. PERFORMANCES

4.1 IBCM GEARED MOTORS (50Hz) 32

4.2 IB GEAR REDUCER - 1400 rpm 45

4.3 IPCM GEARED MOTORS (50Hz) 47

4.4 IP GEAR REDUCER - 1400 rpm 60

5. SALES CONDITIONS

5.1 SALES CONDITIONS 62

1.1.1 Symbols

Physical dimension	Symbol	Symbol units of measure	Input	Output
Power	P	[kW]	P_1	P_2
Requested power	Pr	[kW]	Pr_1	Pr_2
Nominal power	Pn	[kW]	Pn_1	Pn_2
Torque	M	[Nm]	M_1	M_2
Nominal torque	Mn	[Nm]	/	Mn_2
Requested torque	Mr	[Nm]	Mr_1	Mr_2
Speed	n	[rpm]	n_1	n_2
Force	F	[N]	/	/
Radial load	Fr	[N]	Fr_1	Fr_2
Axial load	Fa	[N]	Fa_1	Fa_2
Reduction ratio	i	[ ]	/	/
Dynamic efficiency	η_d	[ ]	/	/
Service factor	f.s.	[ ]	/	/
Static	s	[ ]	/	/
Dynamic	d	[ ]	/	/
Calculated	c	[ ]	/	/
Maximum	max	[ ]	/	/
Minimum	min	[ ]	/	/
Moment of inertia	J	[kgm^2]	J_1	J_2
Ambient temperature	T_{amb}	[°C]	/	/
Dimension		[mm]	/	/
Angular backlash	y	[arcmin]	y_1	y_2

1.1.2 Formulas

REDUCER		
Starting or stopping time	$t= v / a$	[s]
Velocity in rotary motion	$v= \pi * d * n / 60$ $v= \omega * r$	[m/s]
Speed velocity Angular velocity	$n= 60 * v / (\pi * d)$ $\omega= v / r$	[rpm] [rad/s]
Acceleration or deceleration according to a starting / stopping time	$a= v / t$	[m/s^2]
Angular acceleration	$\alpha= n / (9,55 * t)$ $\alpha= \omega / t$	[rad/s^2]
Starting or stopping distance (according to acceleration / deceleration or angular velocity)	$s= a * t^2 / 2$ $s= v * t /2$	[m]
Horizontal translation force	$F= \mu * m * g$	[N]
Vertical translation force (lifting)	$F= m * g$	
Inclined plane translation force	$F= m * g (\mu * \cos\beta + \mathrm{sen}\beta)$	
m= mass [kg]; g= gravity acceleration [m/s^2]; μ= friction coefficent; β= angle of inclination		
Moment of inertia	$J= m * v^2 / \omega^2$	[kgm^2]
Torque	$M= F * d / 2$ $M= J * \omega / t$	[Nm]

MOTOR and GEARMOTOR		
Starting time	$ta= (Jext+Jm)*n_n/9,55+(M_{peak}-Mr)$	[s]
Braking time	$ts= (Jext+Jm)*n_n/9,55+(M_{peak}+Mr)$	[s]
Motor rotation angle during starting	$\varphi= n_n * ta / 19,1$	[rad]
Motor rotation angle during braking	$\varphi= n_n * ts / 19,1$	[rad]
Power available at the shaft of single phase motor	$P= V * I * \eta *\cos\omega$	[W]
Power available at the shaft of three phase motor	$P= 1,73 * V * I * \eta * \cos\omega$	[W]

RUNNING at 60Hz		
Speed velocity at 60Hz	$n_{60Hz}= 1,2 * n_{50Hz}$	[rpm]
Power at 60Hz	$P1_{60Hz}= P1_{50Hz} * V_{60Hz}/V_{50Hz}$	[kW]
If input voltage at 60 Hz (V_{60Hz}) corresponds to winding voltage at 50 Hz (V_{50Hz}), power doesn't change $P1_{60Hz}= P1_{50Hz}$ If input voltage at 60 Hz (V_{60Hz}) is 20% higher than winding voltage at 50 Hz (V_{50Hz}), power increases by 20% $P1_{60Hz}= 1,2\ P1_{50Hz}$		
Torque at 60Hz	$M_{60hz}= M_{50Hz} * P1_{60Hz} / (1,2 * P1_{50Hz})$	[Nm]
Service factor at 60Hz	$f.s._{60Hz}= f.s._{50Hz} * 1,175 * P1_{50Hz} / P1_{60Hz}$	-

1.2 PRODUCT SELECTION

For correctly selecting a gear reducer or geared motor, several essential pieces of data are required:

A. The rotational input speed to the gear reducer **(n_1)** and the rotational output speed **(n_2).** Through these two values it is possible to calculate the reduction ratio **(i)** of the gear reducer using the following formula: **$i=n_1/n_2$**

B. The torque required by the application **(Mr_2)**.

The geared motor or gear reducer can be selected once this data is known.
This guide helps you to select the right product in just a few steps:

Geared motor selection

1. Determine the application's actual service factor **(s.f.)**. This parameter depends on the type of load of the powered machine, the number of starts per hour and the hours of operation (refer to the "Service factor" paragraph).
2. Calculate the input power **Pr_1** using the required torque value **Mr_2**, the speed **n_2** and dynamic efficiency value. **$Pr1=(Mr_2*n_2)/(9550*\eta_d)$.** The dynamic efficiency value depends on the type of gear reducer and on the number of gear reduction stages. (To calculate the efficiency value see its page).
3. Consult the geared motor performance tables and identify a normalised power value **Pn_1** exceeding the required power **Pr_1**, such that: **$Pn_1 \geq Pr_1$**
4. Once the suitable nominal power has been identified, select the geared motor capable of generating the rotational speed closest to the desired n_2 value and with service factor s.f. greater or equal to that required by the application.

In the geared motor selection tables the combinations include 2-pole, 4-pole and 6-pole motors powered at 50Hz.

Gear reducer selection

1. Determine the application's service factor **(s.f.)** (consult to the "Service factor" paragraph on its page) .
2. Calculate the reduction ratio i from the requested output speed **n_2** and from the input speed **n1. $i=n_1/n_2$**
3. Calculate the torque **Mc_2** for selecting the gear reducer through the torque required by the application **Mr_2** and the service factor s.f.: **$Mc_2=Mr_2*(f.s.)$**
4. Consult the Gear Reducer Performance tables looking for the reducer that, with the reduction ratio closer to the calculated one, has a nominal torque **Mn_2** so that: **$Mn_2 \geq Mc_2$**

Checks

Once the gear reducer or geared motor has been selected, the following checks should be performed:

A. **Thermal power**

The gear reducer's thermal power must be equal to or greater than the installed mechanical power, or the power required by the application according to the indications contained in the section (refer to the "Thermal power" paragraph).

B. **Maximum torque**

Generally, the maximum torque (peak instantaneous load) that can be applied to the gear reducer must not exceed 200% of the nominal torque **Mn_2** (ATEX - M_2max).

C. **Radial loads**

1. Verify that the radial loads acting on the input and/or output shafts are within with the values indicated in the catalogue. If they exceed these values, increase the size of the gear reducer or modify the external load capacity. During the checking phase, it is important to remember that the values indicated in the catalogue refer to loads acting on the mid-point of the shaft protrusion, therefore, if the load is applied to a different position, appropriate formulas must be used to calculate the admissible load in the desired position (refer to the "Radial loads" paragraph).
2. If accessory output shafts are present, make sure that the applied load is compatible with shaft size. If help is needed: contact MOTOVARIO TECHNICAL SERVICE.

D. If an electric motor is going to be fitted to the selected gear reducer, check for its applicability by referring to the configuration table (see paragraph "Motor flange availability"). From IEC 180 motors, verify if necessary to support the motor with feet. In case of need please contact MOTOVARIO TECHNICAL SERVICE.

1.3 SERVICE FACTOR

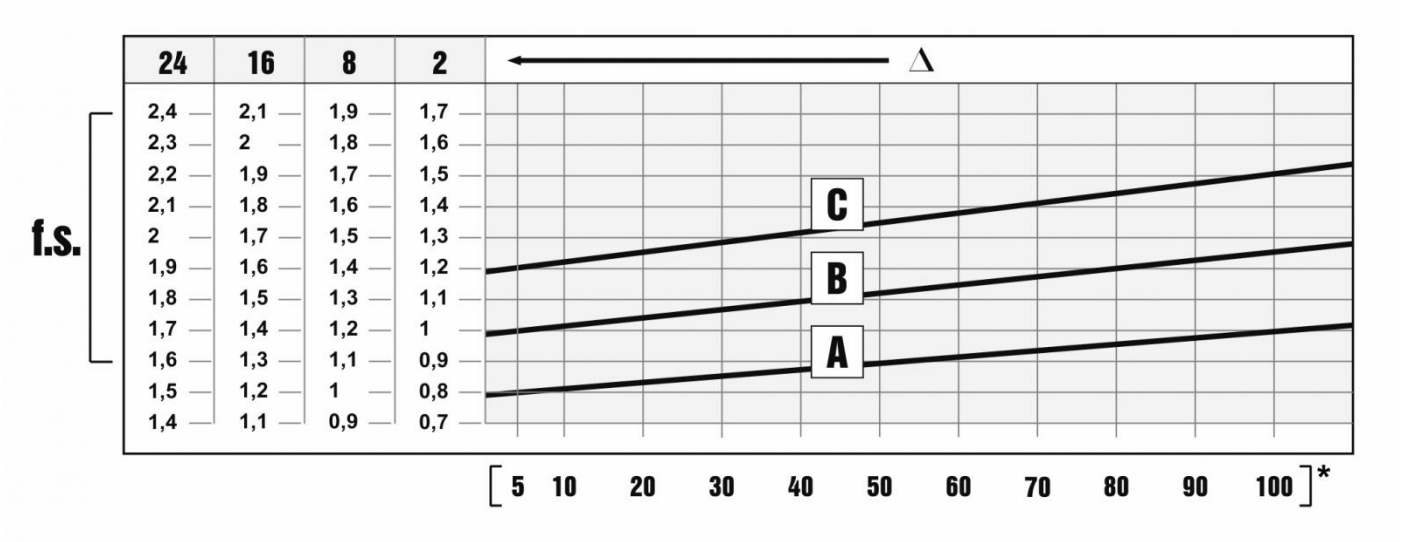

The service factor (f.s.) depends on the operating conditions the gear reducer is subjected to.
The parameters that need to be taken into consideration to select the most adequate service factor correctly comprise:

- type of load of the operated machine : A - B - C
- length of daily operating time: hours/day (Δ)
- start-up frequency: starts/hour (*)

LOAD:

- **A** - uniform = fa ≤ 0,3
- **B** - moderate shocks = fa ≤ 3
- **C** - heavy shocks = fa ≤ 10

fa = Je/Jm

- Je [kgm^2] moment of reduced external inertia at the drive-shaft
- Jm [kgm^2] moment of inertia of motor

If fa > 10 call MOTOVARIO TECHNICAL SERVICE.

A. Screw feeders for light materials, fans, assembly lines, conveyor belts for light materials, small mixers, lifts, cleaning machines, fillers, control machines.
B. Winding devices, woodworking machine feeders, goods lifts, balancers, threading machines, medium mixers, conveyor belts for heavy materials, winches, sliding doors, fertilizer scrapers, packing machines, concrete mixers, crane mechanisms, milling cutters, folding machines, gear pumps.
C. Mixers for heavy materials, shears, presses, centrifuges, rotating supports, winches and lifts for heavy materials, grinding lathes, stone mills, bucket elevators, drilling machines, hammer mills, cam presses, folding machines, turntables, tumbling barrels, vibrators, shredders.

1.4 INSTALLATION

To install the gear reducer it is necessary to note the following recommendations:

- Check the correct direction of rotation of the gear reducer output shaft before fitting the unit to the machine.
- In the case of particularly lengthy periods of storage (4/6 months), if the oil seal is not immersed in the lubricant inside the unit, it is recommended to change it since the rubber could stick to the shaft or may even have lost the elasticity it needs to function properly.
- Whenever possible, protect the gear reducer against solar radiation and bad weather.
- Ensure the motor cools correctly by ensuring good passage of air from the fan side.
- In the case of ambient temperatures < -5°C or > +40°C call MOTOVARIO TECHNICAL SERVICE.
- The various parts (pulleys, gear wheels, couplings, shafts, etc.) must be mounted on the shafts using special threaded holes or other systems that anyhow ensure correct operation without risking damage to the bearings or external parts of the units. Lubricate the surfaces in contact to avoid seizure or oxidation.
- Painting must definitely not go over rubber parts and the holes on the breather plugs, if any.
- For units equipped with oil plugs, replace the closed plug used for shipping with the special breather plug.
- Check the correct level of the lubricant through the indicator, if there is one.
- Starting must take place gradually, without immediately applying the maximum load.
- When there are parts, objects or materials under the motor drive that can be damaged by even limited spillage of oil, special protection should be fitted.

Assembling motor on pam flange

When the unit is supplied without motor, it is necessary to follow these recommendation to ensure the correct assembly of the electric motor. Check that the tolerances for the motor shaft and flange correspond to the “standard”. Carefully clean the shaft, spigot and surfaces of the flange removing traces of paint and dirt, and confirm the key is fitted correctly. Fit the half sleeve to the motor shaft taking care to ensure the motor shaft and bearings are not damaged by avoiding excessive force and where necessary using assembly equipment. Key-ways with tightened tolerances.

2.1 DESIGN FEATURES

MOTOVARIO S.A.U. products are supplied with the following surface treatment features:

Grey-coloured cast-iron cases for gears
- Die-cast materials are always painted.

Painting specifications:
- Grey epoxy-polyester RAL 7031. Polyester resin based heat-hardening powders, altered with epoxy resins.
  Mechanical properties: Tests carried out onto degreased Unichim white lattens (film thickness: 60 microns) comply with the following specifications: adherence (ISO2409).
  Heat resistance: 24 HOURS AT 150°C.
  Corrosion strength: ASTM B 117/97 salt fog from 100 to 500 hours depending on the support's preliminary treatment.

Performance:
- Loading capacity in accordance with DIN 3990, ISO 6336, AGMA 2101, ISO 10300, DIN 3991, ISO 281, DIN 743.

Dynamic η:
- The efficiency is the ratio between the output power P2 and the power absorbed by thegear reducer P_1: $\eta = P_2/P_1$.

I-range helical gear reducers have an average value equal to:
I..2 stages = 0,96

2.2.1 Designation

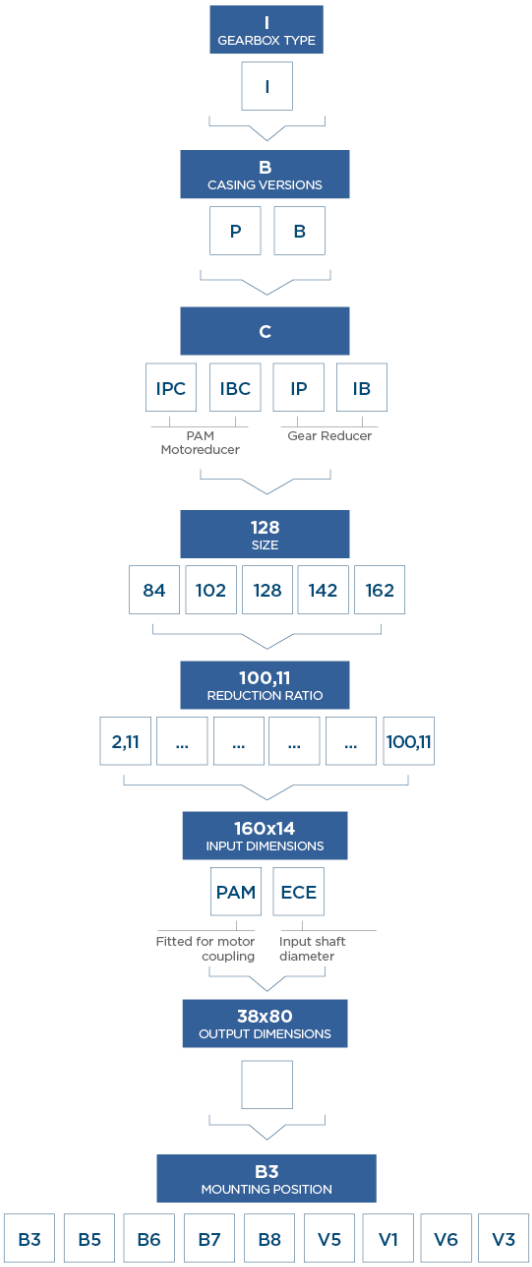

2.2.2 Versions

I	
IPC 84-162	**IBC 84-162**
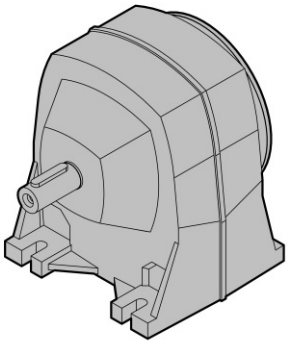	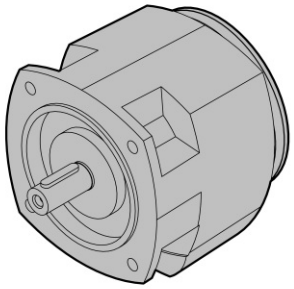
IP 84-162	**IB 84-162**
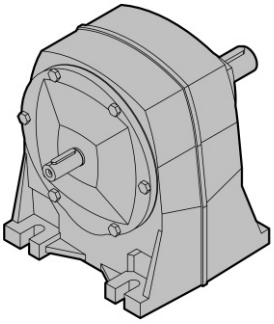	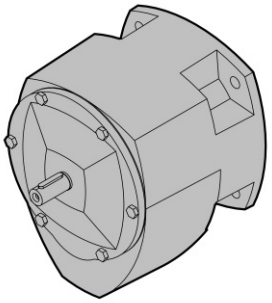

2.2.3 Modularity

IPC...	IBC...
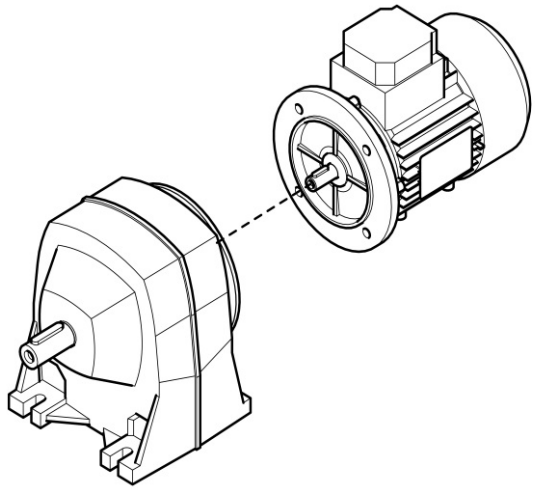	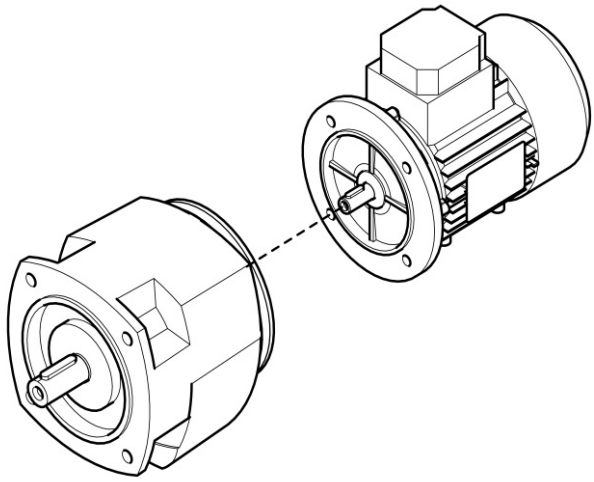

IP...	IB...
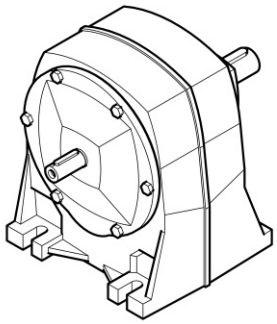	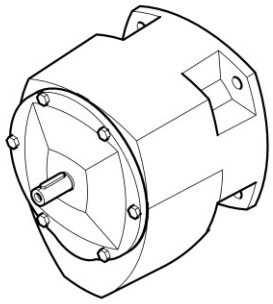

IPC... - IBC... - Fitted for motor coupling version (PAM)

IP... - IB... - Input shaft versions

2.3.1 Mounting positions

The mounting position of the gear unit identifies its space orientation. B3 mounting position, as from a technical point of view, ensures lower oil splash, better lubrication and less heating.

IP - IPC	IB - IBC
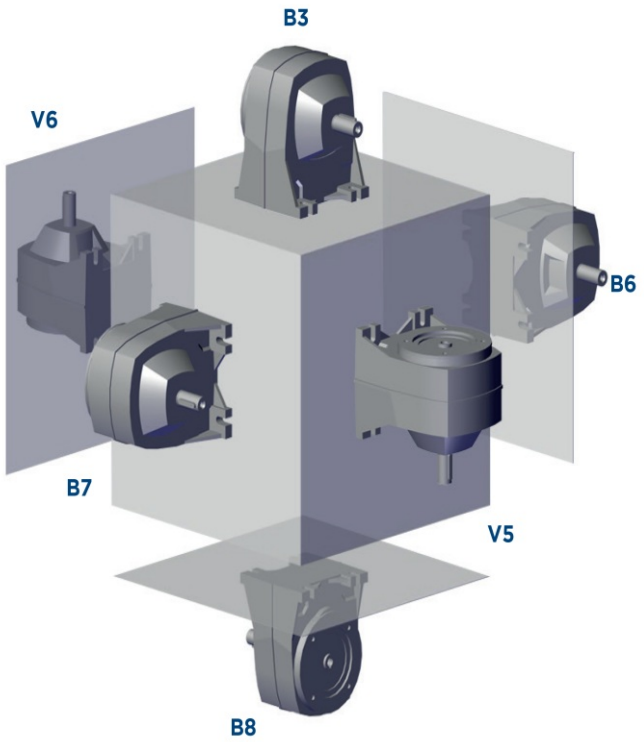	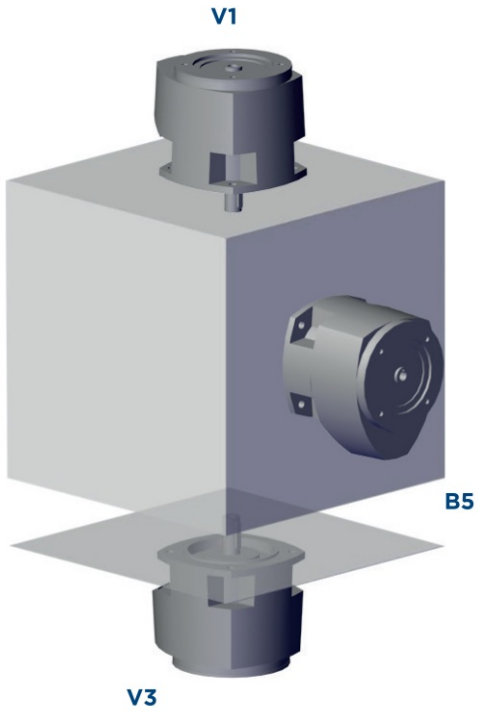

2.3.2 Position of terminal box

Unless otherwise specified when ordering, the gear reducer is supplied with terminal box in position 1.

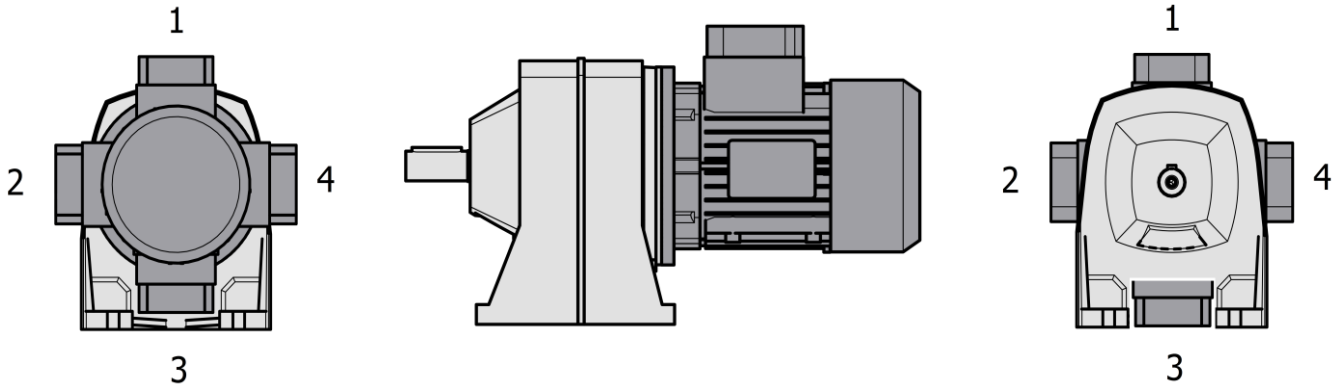

2.4.1 Critical applications

I	84	102	128	142	162
V5 - V1: 1500 < n1 < 3000	✔	✔	✔	✔	✔
n1 > 3000	B	B	B	B	B
V3 - V6	B	B	B	B	B

✔ Verified application
A Application not recommended
B Check the application and/or call MOTOVARIO TECHNICAL SERVICE.

2.4.2 Information

The performance given in the catalogue correspond to mounting position B3 or similar, when the first stage is not entirely immersed in oil. For other mounting positions and/or particular input speeds, refer to the tables that highlight different critical situations for each size of gear reducer. It is also necessary to take due consideration of and carefully assess the following applications by calling MOTOVARIO TECHNICAL SERVICE:

- To avoid the use as multiplier.
- Use in services that could be hazardous for people if the gear reducer fails.
- Applications with especially high inertia.
- Use as a lifting winch.
- Applications with high dynamic strain on the case of the gear reducer.
- In places with T_{amb} under -5°C or over 40°C.
- Use in chemically aggressive environments.
- Use in a salty environment.
- Mounting positions not envisaged in the catalogue.
- Use in radioactive environments.
- Use in environments pressures other than atmospheric pressure.

Avoid applications where even partial immersion of the reducer is required.
In the presence of overloading due to full load, braking, shocks or other static and dynamic causes, please verify that the peak torque is less than $2*Mn_2$.

2.5 MOTOR FLANGE AVAILABILITY

These tables report all possible dimensions. Please verify service factor.

	IPC - IBC 84		
i	56	63	71
2.14	B5	B5	B5
2.75	B5	B5	B5
3.58	B5	B5	B5
4.53	B5	B5	B5
5.49	B5	B5	B5
6.83	B5	B5	B5
8.77	B5	B5	B5
11.41	B5	B5	B5
14.63	B5	B5	B5
19.08	B5	B5	B5
24.11	B5	B5	B5
29.27	B5	B5	B5
36.36	B5	B5	B5
46.73	B5	B5	B5

	IPC - IBC 102			
i	63	71	80	90
2.34		B5	B5	B5
2.93		B5	B5	B5
3.91		B5	B5	B5
4.82		B5	B5	B5
5.73		B5	B5	B5
6.92		B5	B5	B5
8.86		B5	B5	B5
10.52		B5	B5	B5
11.93	B5			
12.71		B5	B5	B5
14.95	B5			
16.98		B5	B5	B5
19.94	B5			
24.61	B5	B5	B5	
29.21	B5	B5	B5	
35.28	B5	B5	B5	
47.13	B5	B5	B5	

	IPC - IBC 128					
i	063	071	080	090	100	112
2.21		B5	B5	B5	B5	B5
2.77		B5	B5	B5	B5	B5
3.66		B5	B5	B5	B5	B5
4.57		B5	B5	B5	B5	B5
5.55		B5	B5	B5	B5	B5
6.91		B5	B5	B5	B5	B5
9.44		B5	B5	B5	B5	B5
11.47		B5	B5	B5	B5	B5
13.77		B5	B5	B5		
16.53	B5	B5	B5			
18.23		B5	B5	B5		
20.68	B5	B5	B5			
22.72		B5	B5	B5		
27.61		B5	B5	B5		
34.37		B5	B5	B5		
41.45	B5	B5	B5			
47.56		B5	B5	B5		
51.59	B5	B5	B5			
66.69		B5	B5	B5		
71.40	B5	B5	B5			
100.11	B5	B5	B5			

	IPC - IBC 142		
i	80	90	100-112
2.17		B5	B5
2.80		B5	B5
3.68		B5	B5
4.74		B5	B5
5.61		B5	B5
7.21		B5	B5
9.97		B5	B5
10.96	B5		
11.79		B5	B5
14.13	B5		
15.16		B5	B5
18.57	B5	B5	B5
23.90	B5	B5	B5
28.26	B5	B5	B5
36.34	B5	B5	B5
45.23	B5	B5	B5

	IPC - IBC 162			
i	80	90	100-112	132
2.22			B5	B5
2.87			B5	B5
3.80			B5	B5
4.57			B5	B5
5.21			B5	B5
6.49			B5	B5
9.41			B5	B5
10.74			B5	B5
11.05	B5	B5		
13.36			B5	B5
14.31	B5	B5		
18.93	B5	B5	B5	
22.75	B5	B5	B5	
25.97	B5	B5	B5	
32.31	B5	B5	B5	
45.69	B5	B5	B5	

2.6 OUTPUT SHAFT BEARINGS

IP - IB - IPC - IBC				
84	102	128	142	162
Standard	Standard	Standard	Standard	Standard
1	1	1	1	1

1 - Ball Bearing

2.7.1 Information

The value of the admissible radial load [N] is given in the tables relating to the performance of the gear reducer at issue. It is related to the load applied on the centre line of the shaft and in the most unfavourable conditions of angle of application and direction of rotation. The maximum admissible axial loads are 1/5 of the value of the given radial load when they are applied in combination with the radial load. The tables relating to the output shafts give the maximum admissible value. This value must never be exceeded since it relates to the strength of the case. Particular conditions of radial load higher than the limits of the catalogue may occur. In this case, contact MOTOVARIO TECHNICAL SERVICE and provide details on the application: direction of the load, direction of rotation of the shaft, type of service. The radial load on the shaft is calculated with the following formula: **Fre=(2000*M*fz)/D≤Fr1 or Fr2**

- **Fre** [N] Resulting radial load
- **M** [Nm] Torque on the shaft
- **D** [mm] Diameter of the transmission member mounted on the shaft
- **Fr1**-**Fr2** [N] Value of the maximum admitted radial load (see relative tables)
- **fz** = 1,1 gear pinion - 1,4 chain wheel - 1,7 v-pulley - 2,5 flat pulley

2.7.2 Input

When the radial load is not on the centre line of the shaft, it is necessary to adjust the admissible radial load Fr1 with the following formula: **Frx=(Fr1*a)/(b+x)**

- **a** , **b** = values given in the tables
- **x** = distance from the point of application of the load to the shaft shoulder

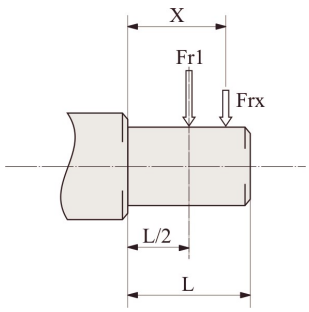

IP - IB	84	102	128	142	162
a	46,5	58	66,25	81,5	99,5
b	35	43	49,25	61,5	74,5
Fr1 max(**)	570	910	1200	2140	2860

(**Fr1 max) Max admissible value of the reducer in static conditions and/or for limited operations. For continuous overhung loads please check the values on the performances tables calculated according to the casing, the shaft and bearings.

2.7.3 Output

When the radial load is not on the centre line of the shaft, it is necessary to adjust the admissible radial load Fr2 with the following formula: **Frx=(Fr2*a)/(b+x)**

- **a** , **b** = values given in the tables
- **x** = distance from the point of application of the load to the shaft shoulder

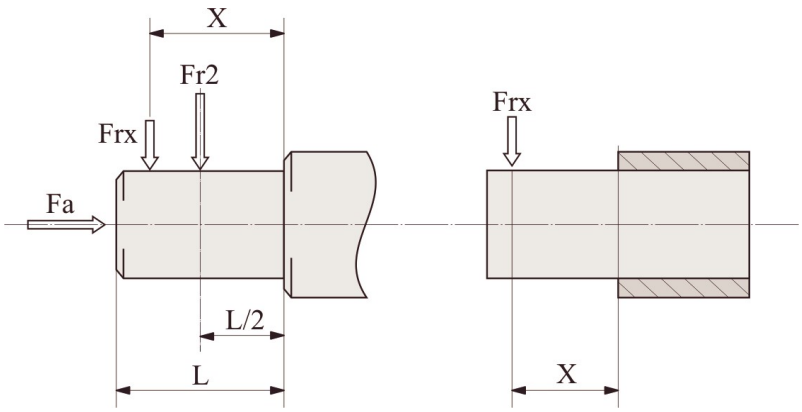

IB-IP-IBC-IPC	84	102	128	142	162
a	55	66,5	77,5	88,75	125
b	38	46,5	52,5	59	85
Fr2 max(**)	1000	2500	4800	5000	6000

(**Fr2 max) Max admissible value of the reducer in static conditions and/or for limited operations. For continuous overhung loads please check the values on the performances tables calculated according to the casing, the shaft and bearings.

2.8.1 Information

In cases of ambient temperatures not envisaged in the table, contact MOTOVARIO TECHNICAL SERVICE. In the case of temperatures under -30°C or over 60°C it is necessary to use oil seals with special properties. For operating ranges with temperatures under 0°C it is necessary to consider the following:

1. The motors need to be suitable for operation at the envisaged ambient temperature.
2. The power of the electric motor needs to be adequate for exceeding the higher starting torques required.
3. In case of cast-iron gear reducers, pay attention to impact loads since cast iron may have problems of fragility at temperatures under -15°C.
4. During the early stages of service, problems of lubrication may arise due to the high level of viscosity taken on by the oil and so it is wise to have a few minutes of rotation under no load.

Oil (NON Atex products) must be changed after approx. 10000 hours/2 years of operation; this time varies based on the type of service and on the environment inside which the gear reducer is installed. Units not featuring any oil plug are life-lubricated, and therefore maintenance-free.

2.8.2 Lubricants

Specifications of lubricants recommended by MOTOVARIO S.A.U.
All units are supplied with LAND OIL GEAR POWER 220 oil, unless otherwise specified by the client.

	IP - IB - IPC - IBC 84 ÷ 162	
	Mineral oil	
T_{amb}°C ISO	(-5) ÷ (+40) ISO VG220	(-15) ÷ (+25) ISO VG150
LAND OIL	GEAR POWER 220	-
ENI	BLASIA 220	BLASIA 150
SHELL	OMALA S2 G 220	OMALA S2 G 150
KLUBER	Kluberoil GEM 1-220N	Kluberoil GEM 1-150N
MOBIL	MOBILGEAR 600 XP220	MOBILGEAR 600 XP150
CASTROL	ALPHA SP 220	ALPHA SP 150
BP	ENERGOL GR-XP220	ENERGOL GR-XP150
PETRONAS	GEAR MEP 220	GEAR MEP 150

2.8.3 Special lubricants

	T_{amb}°C	Polyglicol synthetic oil
LAND OIL	**(-30) ÷ (+30)**	Gear Sint XS 150 (ISO VG150)
	(-20) ÷ (+40)	Gear Sint XS 220 (ISO VG220)
ENI	**(-30) ÷ (+30)**	Blasia S 150 (ISO VG150)
	(-20) ÷ (+40)	Blasia S 220 (ISO VG220)
MOBIL	**(-45) ÷ (+0)**	SHC 624 (ISO VG32)
	(-40) ÷ (+5)	SHC 626 (ISO VG68)
KLUBER	**(-40) ÷ (+5)**	Klubersynth GH 6-32 (ISO VG32)
	(-35) ÷ 10)	Klubersynth GH 6-80 (ISO VG80)
	(-30) ÷ (+40)	Klubersynth GH 6-150 (ISO VG150)
	(-25) ÷ (+40)	Klubersynth GH 6-220 (ISO VG220)
	(-15) ÷ (+50)	Klubersynth GH 6-460 (ISO VG460)
	(-10) ÷ (+70)	Klubersynth GH 6-680 (ISO VG680)

	T_{amb}°C	Polyglicol synthetic oil for food grade
KLUBER	**(-30) ÷ (+15)**	Klubersynth UH1-6 100 (ISO VG100)
	(-25) ÷ (+40)	Klubersynth UH1-6 220 (ISO VG220)
	(-15) ÷ (+40)	Klubersynth UH1-6 320 (ISO VG320)
	(-15) ÷ (+50)	Klubersynth UH1-6 460 (ISO VG460)
	(-10) ÷ (+50)	Klubersynth UH1-6 680 (ISO VG680)

T_{amb}°C - Ambient operating temperature.
If 'special' lubricant is required please contact TECHNICAL SERVICE.

2.8.4 Quantity

- For the gear reducer I... series it is always necessary to specify the envisaged position.
- The gear reducer I... series are supplied complete with lubricant, have no oil plugs and need no maintenance.

Oil quantity in the table (litres ~) are indicative; for a proper use you will have to refer to the level plug or the dipstick. Any level difference could depend on construction tolerances, but also by the placement of the unit or by the mounting surface at the customer's premises. It is appropriate to check and, if necessary, restores the level when the units are installed.

	IP - IB - IPC - IBC				
	84	102	128	142	162
B3-B5	0,35	0,5	1	1,25	2
B8					
B6-B7					
V5-V1					
V6-V3					

3.1.1 IPC...

IPC...

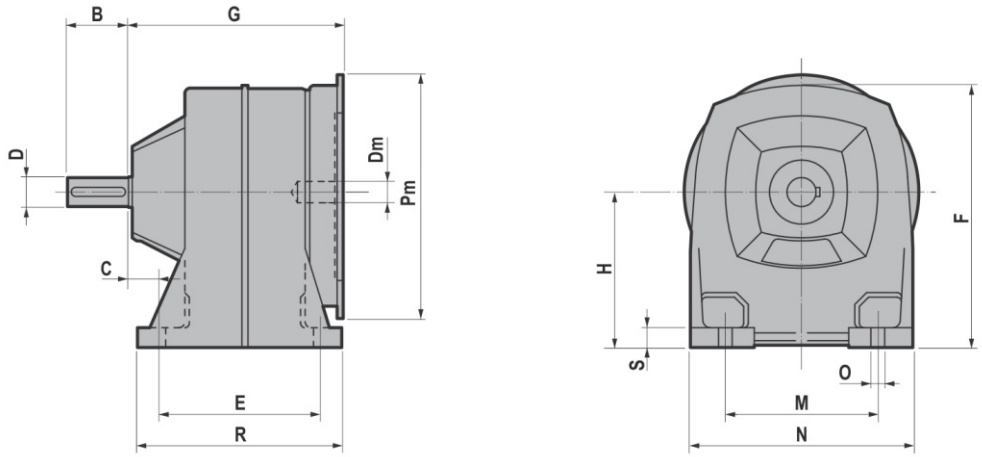

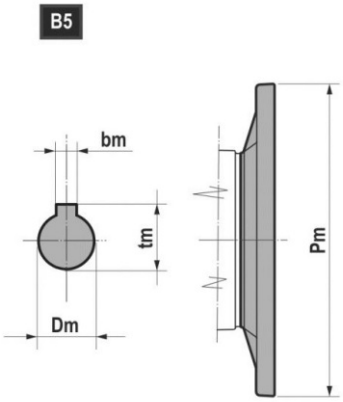

IPC	D (k5)	B	C	E	F	M	N	O	H	R	S
84	16	34	14	88	143	78	120	10	84	108	11
102	19	40	20	106	176	100	150	9	102	134	13
128	24	50	24	126	215	118	178	11	128	160	16
142	28	60	35	145	237	130	196	11	142	179	18
162	38	80	40	205	269	160	226	14	162	245	21

		G				
IEC	Pm x Dm	IPC 84	IPC 102	IPC 128	IPC 142	IPC 162
56	**120x9**	115	/	/	/	/
63	**140x11**	123	141	156	/	/
71	**160x14**	156	141	157	/	/
80	**200x19**	/	185	175	193	258
90	**200x24**	/	185	192	210	258
100-112	**250x28**	/	/	216	252	261
132	**300x38**	/	/	/	/	331

B5	Pm	Dm	bm	tm
56	120	9	3	10,4
63	140	11	4	12,8
71	160	14	5	16,3
80	200	19	6	21,8
90	200	24	8	27,3
100	250	28	8	31,3
112	250	28	8	31,3
132	300	38	10	41,3

3.1.2 IBC...

IBC...

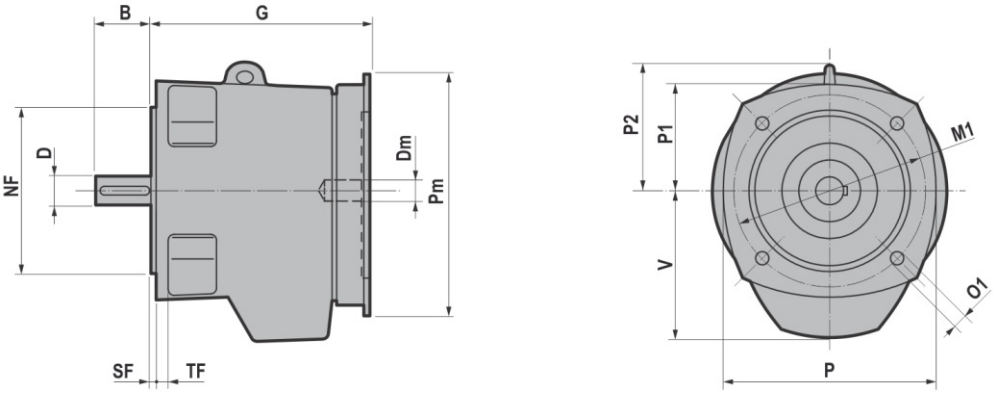

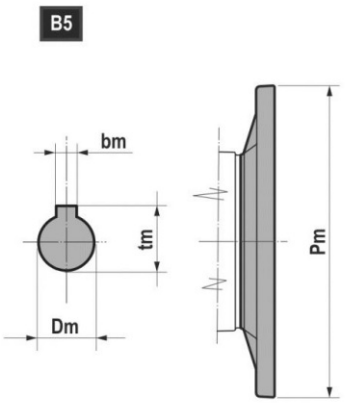

IBC	D (k5)	B	M1	NF (g6)	O1	P	P1	P2	SF	TF	V
84	16	34	100	80	7	110	55	-	8	3	78
102	19	40	130	110	9	145	73	-	10	3.5	100
128	24	50	165	130	11	172	86	-	10	3.5	128
142	28	60	165	130	11	190	95	113	10	3.5	140
162	38	80	215	180	14	216	108	131	12	4	160

		G				
IEC	Pm x Dm	IPC 84	IPC 102	IPC 128	IPC 142	IPC 162
56	**120x9**	115	/	/	/	/
63	**140x11**	123	141	156	/	/
71	**160x14**	156	141	157	/	/
80	**200x19**	/	185	175	193	258
90	**200x24**	/	185	192	210	258
100-112	**250x28**	/	/	216	252	261
132	**300x38**	/	/	/	/	331

B5	Pm	Dm	bm	tm
56	120	9	3	10,4
63	140	11	4	12,8
71	160	14	5	16,3
80	200	19	6	21,8
90	200	24	8	27,3
100	250	28	8	31,3
112	250	28	8	31,3
132	300	38	10	41,3

3.1.3 IP...

IP...

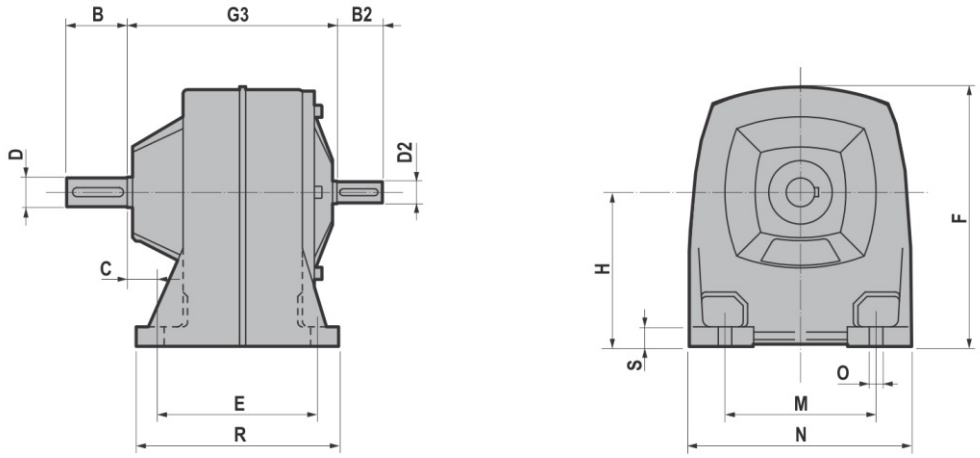

IP	D (k5)	B	C	E	F	M	N	O	H	R	S	G3	D2 (k5)	B2
84	16	34	14	88	143	78	120	10	84	108	11	111	11	23
102	19	40	20	106	176	100	150	9	102	134	13	139	14	30
128	24	50	24	126	215	118	178	11	128	160	16	162	16	34
142	28	60	35	145	237	130	196	11	142	179	18	196	19	40
162	38	80	40	205	269	160	226	14	162	245	21	259	24	50

3.1.4 IB...

IB...

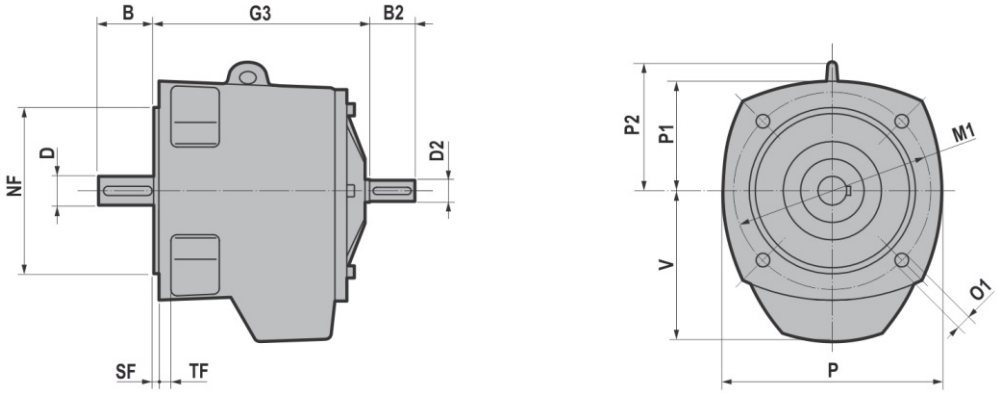

IB	D (k5)	B	M1	NF (g6)	O1	P	P1	P2	SF	TF	V	G3	D2 (k5)	B2
84	16	34	100	80	7	110	55	--	8	3	78	111	11	23
102	19	40	130	110	9	145	73	--	10	3.5	100	139	14	30
128	24	50	165	130	11	172	86	--	10	3.5	128	162	16	34
142	28	60	165	130	11	190	95	113	10	3.5	140	196	19	40
162	38	80	215	180	14	216	108	131	12	4	160	259	24	50

3.2.1 Electric motors

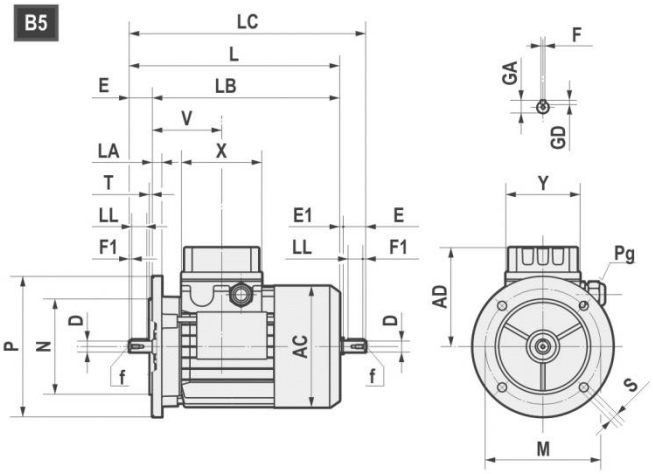

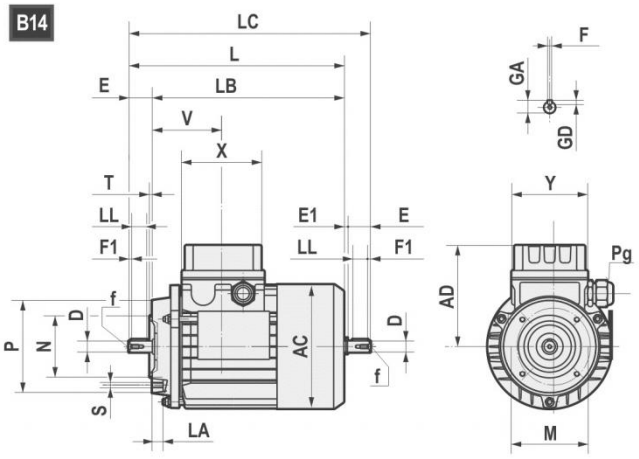

	AC	AD	L	LB	LC	X	Y	V	D	E	E1	f	F1	GA	F	GD
63	121	104	211	188	235,5	80	74	69	11 j6	23	1,5	M4x10	2,5	12,5	4	4
71	139	112	238,5	208,5	271	80	74	74,5	14 j6	30	2,5	M5x12.5	3	16	5	5
80	158	122	272,5 *296	232,5 *256	314 *337	80	74	78	19 j6	40	1,5	M6x16	5	21,5	6	6
90S	173	148	298 *331	248 *281	349,5 *381	98	98	89,5	24 j6	50	1,5	M8x19	5	27	8	7
90L	173	148	323 *356	273 *306	374,5 *408	98	98	89,5	24 j6	50	1,5	M8x19	5	27	8	7
100	191	156	368	308	431,5	98	98	97,5	28 j6	60	3,5	M10x22	7,5	31	8	7
112	211	171	382,5 *408	322,5 *348	447 *472	98	98	100	28 j6	60	3,5	M10x22	7,5	31	8	7
132S	249	195	452	372	536,5	118	118	115,5	38 k6	80	4	M12x28	10	41	10	8
132L	249	195	490	410	574,5	118	118	115,5	38 k6	80	4	M12x28	10	41	10	8
160S	249	195	520	410	/	118	118	115,5	42k6	100	/	M16x36	10	45	12	8

*TP80B4, SH80B4, HSH80B4, TP90S4, SH90S4, HSH90S4, TP90L4, SH90L4, HSH90L4, TP90S6, TP112M4, TP112M6

B5	M	N	P	LA	S	T
63	115	95	140	10	9	3
71	130	110	160	10	9,5	3,5
80	165	130	200	12	11	3,5
90	165	130	200	12	11	3,5
100	215	180	250	15	14	4
112	215	180	250	14,5	14	4
132	265	230	300	20	14	3,5
160	300	250	350	13	18,5	3,5

B14	M	N	P	LA	S	T
63	75	60	90	10	M5	2,5
71	85	70	105	10,5	M6	2,5
80	100	80	120	10,5	M6	3
90	115	95	140	11,5	M8	3
100	130	110	160	15	M8	3,5
112	130	110	160	11,5	M8	3,5
132	165	130	200	20,5	M10	3,5
160	215	180	250	-	M12	4

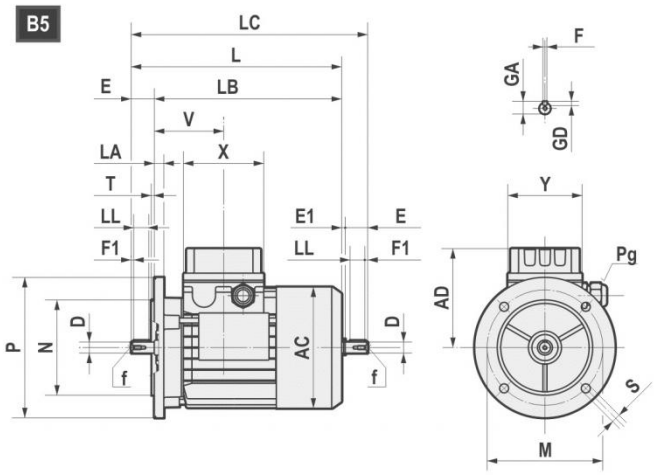

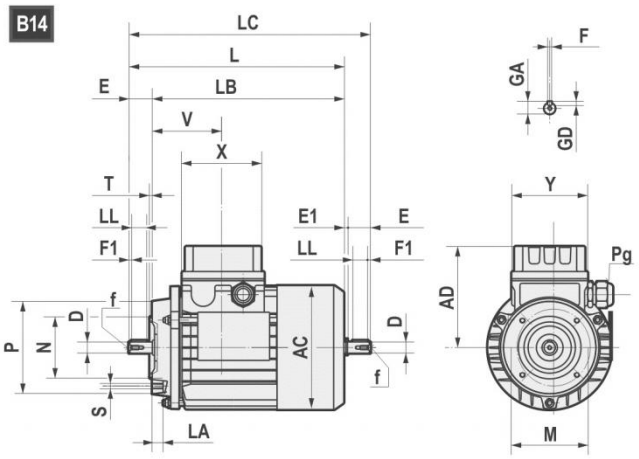

		AC	AD	L	LB	X	D	E	f	GA	F	GD	LL	Pg	
160M	2-4-6	314	251	600	490	158	42	110	M16	45	12	8	90	2-M40x1,5	1-M16x1,5
160L	2-4-6	314	251	645	535	158	42	110	M16	45	12	8	90	2-M40x1,5	1-M16x1,5
180M	2-4	355	267	680	570	158	48	110	M16	51,5	14	9	100	2-M40x1,5	1-M16x1,5
180L	4-6	355	267	720	610	158	48	110	M16	51,5	14	9	100	2-M40x1,5	1-M16x1,5
200L	2-4-6	397	300	785	675	187	55	110	M20	59	16	10	100	2-M50x1,5	1-M16x1,5
225S	4	446	325	820	680	187	60	140	M20	64	18	11	125	2-M50x1,5	1-M16x1,5
225M	2	446	325	815	705	187	55	110	M20	59	16	10	100	2-M50x1,5	1-M16x1,5
225M	4-6	446	325	845	705	187	60	140	M20	64	18	11	125	2-M50x1,5	1-M16x1,5
250M	2-4-6	485	360	910	770	238	60	140	M20	64	18	11	125	2-M63x1,5	1-M16x1,5
250M	2-4-6	485	360	910	770	238	65	140	M20	69	18	11	125	2-M63x1,5	1-M16x1,5
280S	2-4-6	547	390	970	830	238	65	140	M20	69	18	11	125	2-M63x1,5	1-M16x1,5
280S	2-4-6	547	390	970	830	238	75	140	M20	79,5	20	12	125	2-M63x1,5	1-M16x1,5
280M	2-4-6	547	390	1025	885	238	65	140	M20	69	18	11	125	2-M63x1,5	1-M16x1,5
280M	2-4-6	547	390	1025	885	238	75	140	M20	79,5	20	12	125	2-M63x1,5	1-M16x1,5

B5	M	N	P	LA	S	T
160	300	250	350	13	19	5
180	300	250	350	15	19	5
200	350	300	400	17	19	5
225	400	350	450	20	19	5
250	500	450	550	22	19	5
280	500	450	550	22	19	5

3.2.2 Standard high efficiency (TS), high (TH, SH, HSH) and premium (TP) motors

Motovario, three-phase, single polarity motors are available in three different versions (IE1-IE2-IE3) in compliance with standard 60034-30-1. The efficiency value is calculated according to the method set forth in standard IEC 60034-2-1.

1. IE1: TS series (standard efficiency) for nominal power less than 0.12 kW.;
2. IE2: TH series (high efficiency) for nominal power greater than or equal to 0.12 kW and less than 0.75 kW;
3. IE3: TP series (premium efficiency) (*) 4 poles for nominal power greater than or equal to 0.12 kW, 2 and 6 poles for nominal power greater than or equal to 0.75 kW.

Motovario single-phase, single-polarity motors are available in IE2 efficiency class according to IEC 60034-30-1 for nominal power ratings higher than or equal to 0.12 kW and lower than or equal to 2.2 kW. The efficiency value is calculated according to the method set forth in standard IEC 60034-2-1.

Table of Motovario S.A.U. commercial availability

	EFFICIENCY LEVEL		
NOMINAL POWER [kW]	IE1	IE2	IE3
Pn < 0,12	TS-TBS	-	-
0,12 ≤ Pn < 0,75	-	TH-TBH SH-HSH	TP-TBP (**)
Pn ≥ 0,75	-	SH-HSH	TP-TBP

(*) Motor TP100LA4 2,2 kW and all TP 6 poles motors are available at 60Hz only upon request. As a consequence, these motors are in IE3 efficiency level at 50 Hz and IE2 at 60 Hz in case of bifrequency electrical design (standard 230/400-265/460V 50-60Hz and optional 200/346-220/380V 50-60Hz, 290/500-330/575V 50-60Hz and 400/690-460/800V 50-60Hz, see chapter on input voltage and frequency).

(**) Only 4 poles.

3.2.3 Nominal power - [kW]

	63A			63B		63C	63D	71A		71B		71C
P.	TS	TH	TP	TH	TP	TH	TH	TH	TP	TH	TP	TH
2	-	0,18	-	0,25	-	0,37	-	0,37	-	0,55	-	-
4	-	0,12	0,12	0,18	0,18	-	0,25	0,25	0,25	0,37	0,37	0,55
6	0,09	-	-	0,12	-	-	-	0,18	-	0,25	-	0,37

	80A		80B		90S	90L	100LR	100LA	100L	112MR	112MS	112M
P.	TH	TP	TH	TP	TP	TP	TP	TP	TP	TP	TP	TP
2	-	0,75	-	1,1	1,5	2,2	-	-	3	-	-	4
4	0,55	0,55	-	0,75	1,1	1,5	-	2,2	-	2,2	3	4
6	0,37	-	0,55	-	0,75	-	1,1	-	1,5	-	-	2,2

	132S	132MS	132MA	132MB	132M
P.	TP	TP	TP	TP	TP
2	5,5	-	-	-	7,5
4	-	5,5	-	-	7,5
6	3	-	4	5,5	-

	160M	160MA	160MB	160L	160LA	180M	180L
P.	TP	TP	TP	TP	TP	TP	TP
2	-	11	15	18,5	-	22	-
4	-	11	-	-	15	18,5	22
6	7,5	-	-	11	-	-	15

	200L	200LA	200LB	225S	225M	250M	280S	280M
P.	TP	TP	TP	TP	TP	TP	TP	TP
2	-	30	37	-	-	-	-	-
4	30	-	-	37	45	55	75	90
6	-	18,5	22	-	-	-	-	-

3.3 WEIGHTS

The values reported in the tables are referred to the weight of the gearbox with lubricant included.
*Weight without motor

		~ kg									
	Pm x Dm	IPC	IBC	IPC	IBC	IPC	IBC	IPC	IBC	IPC	IBC
* IEC	Pm x Dm	84		102		128		142		162	
56	120x9	4.5	4	/	/	/	/	/	/	/	/
63	140x11	5	4.5	8	7.5	12.5	11.5	/	/	/	/
71	160x14	5.5	5	8.5	8	13	12	/	/	/	/
80	200x19	/	/	9.5	9	15	14	20	19	33	30
90	200x24	/	/	9.5	9	16	15	21	20	33	30
100-112	250x28	/	/	/	/	17	16	23	22	34	31
132	300x38	/	/	/	/	/	/	/	/	37	34

	~ kg	
IP - IB	IP	IB
84	4	3.5
102	7.5	7
128	13	12
142	17	16
162	33	30

3.4 SHAFT END

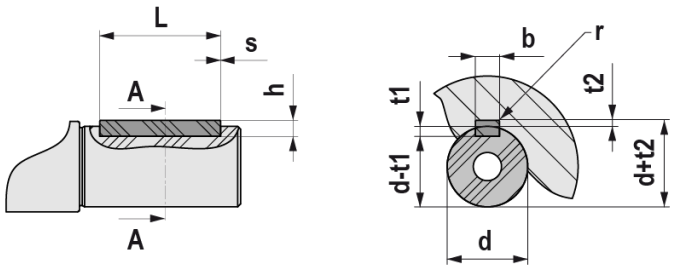

UNI 6604 - DIN 6885															
d			b x h			Tol. b / h	L		s min / max	b	t1	t2	Tol. t1 / t2	r max
	6	8	2	×	2	h9 / h9	6	20	0,16 0,25	2	1,2	1	0,1 0	0,08 0,16
>	8	10	3	×	3		6	36		3	1,8	1,4		
>	10	12	4	×	4		8	45		4	2,5	1,8		
>	12	17	5	×	5		10	56	0,25 0,4	5	3	2,3		0,16 0,25
>	17	22	6	×	6		14	70		6	3	2,8		
>	22	30	8	×	7	h9 / h11	18	90		8	4	3,3	0,2 0	
>	30	38	10	×	8		22	110	0,4 0,6	10	5	3,3		0,25 0,4
>	38	44	12	×	8		28	140		12	5	3,3		
>	44	50	14	×	9		36	160		14	5,5	3,8		
>	50	58	16	×	10		45	180		16	6	4,3		
>	58	65	18	×	11		50	200		18	7	4,4		
>	65	75	20	×	12		56	110	0,6 0,8	20	7,5	4,9		0,4 0,6
>	75	85	22	×	14		63	140		22	9	5,4		
>	85	95	25	×	14		70	160		25	9	5,4		
>	95	110	28	×	16		80	180		28	10	6,4		
>	110	130	32	×	18		90	200		32	11	7,4		
>	130	150	36	×	20		100	160	1 1,2	36	12	8,4	0,3 0	0,7 1
>	150	170	40	×	22		110	180		40	13	9,4		
>	170	200	45	×	25		125	200		45	14	10,4		

4.1 IBCM GEARED MOTORS (50Hz)

0,09 kW

n2 [rpm]	M2 [Nm]	fs	i	Gear reducer	Motor Size	Motor Pole	Fr2 [N]
584,1	1	13,0	2,14	IBC 84	TS56B4	-	1130
454,5	2	13,0	2,75	IBC 84	TS56B4	-	1180
349,2	2	9,9	3,58	IBC 84	TS56B4	-	1230
275,9	3	7,9	4,53	IBC 84	TS56B4	-	1270
227,7	3	6,5	5,49	IBC 84	TS56B4	-	1320
183,0	4	5,2	6,83	IBC 84	TS56B4	-	1370
142,5	5	4,1	8,77	IBC 84	TS56B4	-	1440
109,6	7	3,3	11,41	IBC 84	TS56B4	-	1480
85,4	9	3,3	14,63	IBC 84	TS56B4	-	1560
65,5	12	3,2	19,08	IBC 84	TS56B4	-	1660
51,8	15	2,6	24,11	IBC 84	TS56B4	-	1750
42,7	18	2,1	29,27	IBC 84	TS56B4	-	1830
34,4	23	1,7	36,36	IBC 84	TS56B4	-	1920
26,7	29	1,4	46,73	IBC 84	TS56B4	-	2020
24,4	34	3,0	35,27	IBC 102	TS63A6	-	4000
23,7	35	1,3	36,36	IBC 84	TS63A6	-	2070
18,4	45	0,9	46,73	IBC 84	TS63A6	-	2170
18,2	45	2,4	47,13	IBC 102	TS63A6	-	4270

0,12 kW

n2 [rpm]	M2 [Nm]	fs	i	Gear reducer	Motor Size	Motor Pole	Fr2 [N]
630,8	2	10,7	2,14	IBC 84	TH63A4	-	1130
490,9	2	9,8	2,75	IBC 84	TH63A4	-	1170
377,1	3	7,5	3,58	IBC 84	TH63A4	-	1220
298,0	4	6,0	4,53	IBC 84	TH63A4	-	1260
245,9	5	4,9	5,49	IBC 84	TH63A4	-	1310
197,7	6	3,9	6,83	IBC 84	TH63A4	-	1360
153,9	7	3,1	8,77	IBC 84	TH63A4	-	1430
118,3	9	2,7	11,41	IBC 84	TH63A4	-	1460
113,2	10	4,8	11,93	IBC 102	TH63A4	-	2790
92,3	12	2,7	14,63	IBC 84	TH63A4	-	1520
90,3	12	4,8	14,95	IBC 102	TH63A4	-	2910
81,7	14	4,9	16,53	IBC 128	TH63A4	-	4200
70,8	16	2,4	19,08	IBC 84	TH63A4	-	1620
67,7	16	4,8	19,94	IBC 102	TH63A4	-	3120
65,3	17	4,9	20,68	IBC 128	TH63A4	-	4440
56,0	20	2,0	24,11	IBC 84	TH63A4	-	1710
54,9	20	4,5	24,60	IBC 102	TH63A4	-	3280
46,2	24	3,9	29,21	IBC 102	TH63A4	-	3440
46,1	24	1,6	29,27	IBC 84	TH63A4	-	1780
38,3	29	3,4	35,27	IBC 102	TH63A4	-	3580

4.1 IBCM GEARED MOTORS (50Hz)

0,12 kW

n2 [rpm]	M2 [Nm]	fs	i	Gear reducer	Motor Size	Motor Pole	Fr2 [N]
37,1	30	1,5	36,36	IBC 84	TH63A4	-	1860
32,6	34	4,9	41,45	IBC 128	TH63A4	-	5280
28,9	38	1,1	46,73	IBC 84	TH63A4	-	1950
28,6	39	2,7	47,13	IBC 102	TH63A4	-	3840
26,2	42	4,9	51,59	IBC 128	TH63A4	-	5580
24,7	45	2,3	35,27	IBC 102	TH63B6	-	3930
23,9	46	1,0	36,36	IBC 84	TH63B6	-	1970
18,9	59	3,3	71,40	IBC 128	TH63A4	-	6040
18,6	59	0,7	46,73	IBC 84	TH63B6	-	2050
18,5	60	1,8	47,13	IBC 102	TH63B6	-	4190
13,5	82	2,0	100,11	IBC 128	TH63A4	-	6530

0,18 kW

n2 [rpm]	M2 [Nm]	fs	i	Gear reducer	Motor Size	Motor Pole	Fr2 [N]
635,5	3	7,2	2,14	IBC 84	TH63B4	-	1120
494,5	3	6,7	2,75	IBC 84	TH63B4	-	1160
379,9	4	5,1	3,58	IBC 84	TH63B4	-	1210
300,2	5	4,1	4,53	IBC 84	TH63B4	-	1250
247,7	7	3,3	5,49	IBC 84	TH63B4	-	1290
199,1	8	2,7	6,83	IBC 84	TH63B4	-	1340
155,1	11	2,1	8,77	IBC 84	TH63B4	-	1400
119,2	14	1,8	11,41	IBC 84	TH63B4	-	1400
114,0	14	3,2	11,93	IBC 102	TH63B4	-	2740
93,0	18	1,8	14,63	IBC 84	TH63B4	-	1460
91,0	18	3,2	14,95	IBC 102	TH63B4	-	2860
82,3	20	3,3	16,53	IBC 128	TH63B4	-	4150
71,3	23	1,6	19,08	IBC 84	TH63B4	-	1540
68,2	24	3,2	19,94	IBC 102	TH63B4	-	3060
65,8	25	3,3	20,68	IBC 128	TH63B4	-	4370
56,4	29	1,3	24,11	IBC 84	TH63B4	-	1610
55,3	30	3,1	24,60	IBC 102	TH63B4	-	3220
46,6	35	2,7	29,21	IBC 102	TH63B4	-	3360
46,5	35	1,1	29,27	IBC 84	TH63B4	-	1670
38,6	43	2,3	35,27	IBC 102	TH63B4	-	3500
37,4	44	1,0	36,36	IBC 84	TH63B4	-	1730
32,8	50	3,3	41,45	IBC 128	TH63B4	-	5190
29,1	57	0,7	46,73	IBC 84	TH63B4	-	1730
28,9	57	1,8	47,13	IBC 102	TH63B4	-	3730
26,4	62	3,3	51,59	IBC 128	TH63B4	-	5450
25,5	66	1,6	35,27	IBC 102	TH71A6	-	3790
19,1	88	1,4	47,13	IBC 102	TH71A6	-	4000

4.1 IBCM GEARED MOTORS (50Hz)

0,18 kW

n2 [rpm]	M2 [Nm]	fs	i	Gear reducer	Motor Size	Motor Pole	Fr2 [N]
19,0	86	2,2	71,40	IBC 128	TH63B4	-	5870
14,0	121	1,4	100,11	IBC 128	TH63B4	-	6320

0,25 kW

n2 [rpm]	M2 [Nm]	fs	i	Gear reducer	Motor Size	Motor Pole	Fr2 [N]
630,8	4	5,6	2,14	IBC 84	TH63D4/TH71A4	-	1100
610,9	4	8,8	2,21	IBC 128	TH63D4/TH71A4	-	2940
576,9	4	8,4	2,34	IBC 102	TH63D4/TH71A4	-	2090
490,9	5	4,8	2,75	IBC 84	TH63D4/TH71A4	-	1140
487,4	5	8,8	2,77	IBC 128	TH63D4/TH71A4	-	3050
460,8	5	8,4	2,93	IBC 102	TH63D4/TH71A4	-	2170
377,1	6	3,6	3,58	IBC 84	TH63D4/TH71A4	-	1190
368,9	6	8,8	3,66	IBC 128	TH63D4/TH71A4	-	3190
345,3	7	8,0	3,91	IBC 102	TH63D4/TH71A4	-	2270
298,0	8	2,9	4,53	IBC 84	TH63D4/TH71A4	-	1230
295,4	8	8,8	4,57	IBC 128	TH63D4/TH71A4	-	3290
280,1	8	7,2	4,82	IBC 102	TH63D4/TH71A4	-	2340
245,9	9	2,4	5,49	IBC 84	TH63D4/TH71A4	-	1260
243,2	9	8,8	5,55	IBC 128	TH63D4/TH71A4	-	3400
236,0	10	6,4	5,72	IBC 102	TH63D4/TH71A4	-	2410
197,7	12	1,9	6,83	IBC 84	TH63D4/TH71A4	-	1310
195,4	12	5,2	6,91	IBC 102	TH63D4/TH71A4	-	2490
195,4	12	8,8	6,91	IBC 128	TH63D4/TH71A4	-	3530
153,9	15	1,5	8,77	IBC 84	TH63D4/TH71A4	-	1360
152,4	15	4,4	8,86	IBC 102	TH63D4/TH71A4	-	2600
143,0	16	5,6	9,44	IBC 128	TH63D4/TH71A4	-	3740
128,3	18	3,9	10,52	IBC 102	TH63D4/TH71A4	-	2690
118,3	19	1,5	11,41	IBC 84	TH63D4/TH71A4	-	1330
117,7	19	5,6	11,47	IBC 128	TH63D4/TH71A4	-	3890
106,3	22	3,4	12,70	IBC 102	TH63D4/TH71A4	-	2780
98,0	23	2,8	13,77	IBC 128	TH63D4/TH71A4	-	3990
92,3	25	1,4	14,63	IBC 84	TH63D4/TH71A4	-	1380
81,7	28	2,4	16,53	IBC 128	TH63D4/TH71A4	-	4100
79,6	29	2,6	16,97	IBC 102	TH63D4/TH71A4	-	2930
74,1	31	2,8	18,23	IBC 128	TH63D4/TH71A4	-	4200
70,8	32	1,2	19,08	IBC 84	TH63D4/TH71A4	-	1450
65,3	35	2,4	20,68	IBC 128	TH63D4/TH71A4	-	4300
59,4	39	2,8	22,72	IBC 128	TH63D4/TH71A4	-	4430
56,0	41	1,0	24,11	IBC 84	TH63D4/TH71A4	-	1480
54,9	42	2,2	24,60	IBC 102	TH63D4/TH71A4	-	3140
48,9	47	2,8	27,61	IBC 128	TH63D4/TH71A4	-	4650

4.1 IBCM GEARED MOTORS (50Hz)

0,25 kW

n2 [rpm]	M2 [Nm]	fs	i	Gear reducer	Motor Size	Motor Pole	Fr2 [N]
46,2	50	1,9	29,21	IBC 102	TH63D4/TH71A4	-	3270
46,1	50	0,8	29,27	IBC 84	TH63D4/TH71A4	-	1370
39,3	58	2,7	34,37	IBC 128	TH63D4/TH71A4	-	4900
38,3	60	1,7	35,27	IBC 102	TH63D4/TH71A4	-	3390
37,1	62	0,7	36,36	IBC 84	TH63D4/TH71A4	-	1580
32,6	70	2,4	41,45	IBC 128	TH63D4/TH71A4	-	5070
28,6	80	1,5	47,13	IBC 102	TH63D4/TH71A4	-	3590
28,4	81	2,1	47,56	IBC 128	TH63D4/TH71A4	-	5260
26,2	88	2,4	51,59	IBC 128	TH63D4/TH71A4	-	5330
25,5	93	1,1	35,27	IBC 102	TH71B6	-	3630
20,2	113	1,6	66,69	IBC 128	TH63D4/TH71A4	-	5650
19,1	124	1,0	47,13	IBC 102	TH71B6	-	2900
18,9	121	1,6	71,40	IBC 128	TH63D4/TH71A4	-	5700
13,5	170	1,0	100,11	IBC 128	TH63D4/TH71A4	-	6080

0,37 kW

n2 [rpm]	M2 [Nm]	fs	i	Gear reducer	Motor Size	Motor Pole	Fr2 [N]
654,2	5	3,8	2,14	IBC 84	TH71B4	-	1080
633,5	5	5,9	2,21	IBC 128	TH71B4	-	2930
598,3	6	5,7	2,34	IBC 102	TH71B4	-	2070
509,1	7	3,2	2,75	IBC 84	TH71B4	-	1120
505,4	7	5,9	2,77	IBC 128	TH71B4	-	3030
477,8	7	5,7	2,93	IBC 102	TH71B4	-	2150
391,1	9	2,5	3,58	IBC 84	TH71B4	-	1160
382,5	9	5,9	3,66	IBC 128	TH71B4	-	3170
358,1	10	5,4	3,91	IBC 102	TH71B4	-	2240
309,1	11	2,0	4,53	IBC 84	TH71B4	-	1190
306,3	11	5,9	4,57	IBC 128	TH71B4	-	3260
290,5	12	4,9	4,82	IBC 102	TH71B4	-	2310
255,0	14	1,6	5,49	IBC 84	TH71B4	-	1220
252,3	14	5,9	5,55	IBC 128	TH71B4	-	3380
244,8	14	4,3	5,72	IBC 102	TH71B4	-	2380
205,0	17	1,3	6,83	IBC 84	TH71B4	-	1260
202,6	17	3,5	6,91	IBC 102	TH71B4	-	2460
202,6	17	5,9	6,91	IBC 128	TH71B4	-	3500
159,6	22	1,0	8,77	IBC 84	TH71B4	-	1300
158,0	22	3,0	8,86	IBC 102	TH71B4	-	2550
148,3	23	3,8	9,44	IBC 128	TH71B4	-	3700
133,1	26	2,6	10,52	IBC 102	TH71B4	-	2630
122,7	28	1,0	11,41	IBC 84	TH71B4	-	1070
122,1	28	3,8	11,47	IBC 128	TH71B4	-	3830

4.1 IBCM GEARED MOTORS (50Hz)

0,37 kW

n2 [rpm]	M2 [Nm]	fs	i	Gear reducer	Motor Size	Motor Pole	Fr2 [N]
110,2	31	2,3	12,70	IBC 102	TH71B4	-	2710
101,7	34	1,9	13,77	IBC 128	TH71B4	-	3900
95,7	36	1,0	14,63	IBC 84	TH71B4	-	950
84,7	41	1,6	16,53	IBC 128	TH71B4	-	4000
82,5	42	1,8	16,97	IBC 102	TH71B4	-	2850
76,8	45	1,9	18,23	IBC 128	TH71B4	-	4100
73,4	47	0,8	19,08	IBC 84	TH71B4	-	790
67,7	51	1,6	20,68	IBC 128	TH71B4	-	4190
61,6	56	1,9	22,72	IBC 128	TH71B4	-	4330
58,1	60	0,7	24,11	IBC 84	TH71B4	-	970
56,9	61	1,5	24,60	IBC 102	TH71B4	-	3000
50,7	68	1,9	27,61	IBC 128	TH71B4	-	4500
47,9	72	1,3	29,21	IBC 102	TH71B4	-	3100
40,7	85	1,8	34,37	IBC 128	TH71B4	-	4740
39,7	87	1,1	35,27	IBC 102	TH71B4	-	3200
33,8	103	1,6	41,45	IBC 128	TH71B4	-	4880
29,7	117	1,0	47,13	IBC 102	TH71B4	-	3000
29,4	118	1,4	47,56	IBC 128	TH71B4	-	5050
27,9	125	4,1	32,31	IBC 162	TH71C6/TH80A6	-	11200
27,1	128	1,6	51,59	IBC 128	TH71B4	-	5100
26,6	133	1,4	34,37	IBC 128	TH71C6/TH80A6	-	5100
25,5	136	0,8	35,27	IBC 102	TH71C6/TH80A6	-	2600
24,8	140	2,0	36,34	IBC 142	TH71C6/TH80A6	-	6900
21,0	165	1,1	66,69	IBC 128	TH71B4	-	5380
19,9	174	1,7	45,23	IBC 142	TH71C6/TH80A6	-	7200
19,7	176	3,1	45,69	IBC 162	TH71C6/TH80A6	-	12100
19,6	177	1,1	71,40	IBC 128	TH71B4	-	5400
19,4	183	1,1	47,56	IBC 128	TH71C6/TH80A6	-	5400
19,1	182	0,7	47,13	IBC 102	TH71C6/TH80A6	-	2100
14,0	248	0,7	100,11	IBC 128	TH71B4	-	4800

0,55 kW

n2 [rpm]	M2 [Nm]	fs	i	Gear reducer	Motor Size	Motor Pole	Fr2 [N]
633,5	8	6,7	2,21	IBC 128	TH71C4/TH80A4	-	2910
598,3	8	5,5	2,34	IBC 102	TH71C4/TH80A4	-	2050
505,4	10	6,7	2,77	IBC 128	TH71C4/TH80A4	-	3010
477,8	11	4,9	2,93	IBC 102	TH71C4/TH80A4	-	2120
382,5	13	6,7	3,66	IBC 128	TH71C4/TH80A4	-	3140
358,1	14	3,8	3,91	IBC 102	TH71C4/TH80A4	-	2210
306,3	17	5,8	4,57	IBC 128	TH71C4/TH80A4	-	3220
290,5	17	3,3	4,82	IBC 102	TH71C4/TH80A4	-	2270

4.1 IBCM GEARED MOTORS (50Hz)

0,55 kW

n2 [rpm]	M2 [Nm]	fs	i	Gear reducer	Motor Size	Motor Pole	Fr2 [N]
252,3	20	4,9	5,55	IBC 128	TH71C4/TH80A4	-	3340
244,8	21	2,9	5,72	IBC 102	TH71C4/TH80A4	-	2330
202,6	25	2,4	6,91	IBC 102	TH71C4/TH80A4	-	2400
202,6	25	4,0	6,91	IBC 128	TH71C4/TH80A4	-	3460
158,0	32	2,0	8,86	IBC 102	TH71C4/TH80A4	-	2470
148,3	34	3,5	9,44	IBC 128	TH71C4/TH80A4	-	3630
133,1	38	1,8	10,52	IBC 102	TH71C4/TH80A4	-	2550
127,7	40	2,4	10,96	IBC 142	TH71C4/TH80A4	-	4850
126,7	40	4,9	11,05	IBC 162	TH71C4/TH80A4	-	8550
122,1	42	2,9	11,47	IBC 128	TH71C4/TH80A4	-	3750
110,2	46	1,5	12,70	IBC 102	TH71C4/TH80A4	-	2610
101,7	50	2,0	13,77	IBC 128	TH71C4/TH80A4	-	3790
99,1	51	2,2	14,13	IBC 142	TH71C4/TH80A4	-	5080
97,8	52	4,7	14,31	IBC 162	TH71C4/TH80A4	-	8400
84,7	60	1,5	16,53	IBC 128	TH71C4/TH80A4	-	3830
82,5	62	1,2	16,97	IBC 102	TH71C4/TH80A4	-	2720
76,8	66	2,0	18,23	IBC 128	TH71C4/TH80A4	-	3960
75,4	67	2,2	18,57	IBC 142	TH71C4/TH80A4	-	5320
74,0	69	4,7	18,93	IBC 162	TH71C4/TH80A4	-	8950
67,7	75	1,5	20,68	IBC 128	TH71C4/TH80A4	-	4000
61,6	82	1,8	22,72	IBC 128	TH71C4/TH80A4	-	4150
61,5	83	4,7	22,75	IBC 162	TH71C4/TH80A4	-	9200
58,6	87	2,2	23,90	IBC 142	TH71C4/TH80A4	-	5600
56,9	89	1,0	24,60	IBC 102	TH71C4/TH80A4	-	2790
53,9	94	4,7	25,97	IBC 162	TH71C4/TH80A4	-	9450
50,7	100	1,6	27,61	IBC 128	TH71C4/TH80A4	-	4330
49,5	103	2,2	28,26	IBC 142	TH71C4/TH80A4	-	5800
47,9	106	0,9	29,21	IBC 102	TH71C4/TH80A4	-	2750
43,3	117	4,2	32,31	IBC 162	TH71C4/TH80A4	-	10000
40,7	125	1,4	34,37	IBC 128	TH71C4/TH80A4	-	4500
39,7	128	0,8	35,27	IBC 102	TH71C4/TH80A4	-	3000
38,5	132	2,0	36,34	IBC 142	TH71C4/TH80A4	-	6100
33,8	150	1,3	41,45	IBC 128	TH71C4/TH80A4	-	4590
31,0	164	1,7	45,23	IBC 142	TH71C4/TH80A4	-	6380
30,6	166	3,1	45,69	IBC 162	TH71C4/TH80A4	-	10800
29,7	171	0,7	47,13	IBC 102	TH71C4/TH80A4	-	2000
29,4	173	1,0	47,56	IBC 128	TH71C4/TH80A4	-	4750
29,3	184	2,8	32,31	IBC 162	TH80B6	-	10900
27,1	187	1,1	51,59	IBC 128	TH71C4/TH80A4	-	4740
26,0	207	1,3	36,34	IBC 142	TH80B6	-	6530
21,0	242	0,7	66,69	IBC 128	TH71C4/TH80A4	-	4800
20,9	258	1,1	45,23	IBC 142	TH80B6	-	6750

4.1 IBCM GEARED MOTORS (50Hz)

0,55 kW

n2 [rpm]	M2 [Nm]	fs	i	Gear reducer	Motor Size	Motor Pole	Fr2 [N]
20,7	260	2,1	45,69	IBC 162	TH80B6	-	11700
19,6	259	0,7	71,40	IBC 128	TH71C4/TH80A4	-	4400

0,75 kW

n2 [rpm]	M2 [Nm]	fs	i	Gear reducer	Motor Size	Motor Pole	Fr2 [N]
651,6	11	4,9	2,21	IBC 128	TP80B4	-	2880
615,4	11	4,0	2,34	IBC 102	TP80B4	-	2020
519,9	14	4,9	2,77	IBC 128	TP80B4	-	2980
491,5	14	3,6	2,93	IBC 102	TP80B4	-	2090
393,4	18	4,9	3,66	IBC 128	TP80B4	-	3100
368,3	19	2,8	3,91	IBC 102	TP80B4	-	2170
315,1	22	4,3	4,57	IBC 128	TP80B4	-	3170
298,8	24	2,4	4,82	IBC 102	TP80B4	-	2230
259,5	27	3,6	5,55	IBC 128	TP80B4	-	3300
251,7	28	2,1	5,72	IBC 102	TP80B4	-	2280
208,4	34	1,7	6,91	IBC 102	TP80B4	-	2340
208,4	34	2,9	6,91	IBC 128	TP80B4	-	3400
162,5	44	1,5	8,86	IBC 102	TP80B4	-	2390
152,5	46	2,5	9,44	IBC 128	TP80B4	-	3550
136,9	52	1,3	10,52	IBC 102	TP80B4	-	2450
131,4	54	1,7	10,96	IBC 142	TP80B4	-	4730
130,3	54	3,6	11,05	IBC 162	TP80B4	-	7900
125,5	56	2,1	11,47	IBC 128	TP80B4	-	3660
113,4	62	1,1	12,70	IBC 102	TP80B4	-	2500
104,6	68	1,5	13,77	IBC 128	TP80B4	-	3650
101,9	69	1,6	14,13	IBC 142	TP80B4	-	4950
100,6	70	3,5	14,31	IBC 162	TP80B4	-	8300
87,1	81	1,1	16,53	IBC 128	TP80B4	-	3650
84,9	83	0,9	16,97	IBC 102	TP80B4	-	2580
79,0	90	1,5	18,23	IBC 128	TP80B4	-	3800
77,5	91	1,6	18,57	IBC 142	TP80B4	-	5150
76,1	93	3,5	18,93	IBC 162	TP80B4	-	8830
69,6	102	1,1	20,68	IBC 128	TP80B4	-	3800
63,4	112	1,3	22,72	IBC 128	TP80B4	-	3950
63,3	112	3,5	22,75	IBC 162	TP80B4	-	9000
60,3	117	1,6	23,90	IBC 142	TP80B4	-	5400
58,5	121	0,7	24,60	IBC 102	TP80B4	-	2600
55,4	128	3,5	25,97	IBC 162	TP80B4	-	9300
52,2	136	1,2	27,61	IBC 128	TP80B4	-	4100
51,0	139	1,6	28,26	IBC 142	TP80B4	-	5570
49,3	144	0,7	29,21	IBC 102	TP80B4	-	2700

4.1 IBCM GEARED MOTORS (50Hz)

0,75 kW

n2 [rpm]	M2 [Nm]	fs	i	Gear reducer	Motor Size	Motor Pole	Fr2 [N]
44,6	159	3,1	32,31	IBC 162	TP80B4	-	9750
41,9	169	1,0	34,37	IBC 128	TP80B4	-	4250
39,6	179	1,5	36,34	IBC 142	TP80B4	-	5850
34,7	204	0,9	41,45	IBC 128	TP80B4	-	4030
31,8	222	1,2	45,23	IBC 142	TP80B4	-	6050
31,5	224	2,3	45,69	IBC 162	TP80B4	-	10500
30,3	234	0,7	47,56	IBC 128	TP80B4	-	4500
30,3	243	2,0	32,31	IBC 162	TP90S6	-	10600
27,9	253	0,8	51,59	IBC 128	TP80B4	-	4400
26,9	273	1,0	36,34	IBC 142	TP90S6	-	6100
21,6	340	0,8	45,23	IBC 142	TP90S6	-	6200
21,4	343	1,5	45,69	IBC 162	TP90S6	-	11300

1,10 kW

n2 [rpm]	M2 [Nm]	fs	i	Gear reducer	Motor Size	Motor Pole	Fr2 [N]
659,0	16	5,7	2,17	IBC 142	TP90S4	-	3760
647,1	16	4,9	2,21	IBC 128	TP90S4	-	2840
611,1	17	2,6	2,34	IBC 102	TP90S4	-	1970
516,2	20	4,3	2,77	IBC 128	TP90S4	-	2940
510,7	20	5,7	2,80	IBC 142	TP90S4	-	3900
488,1	21	2,5	2,93	IBC 102	TP90S4	-	2030
390,7	27	3,5	3,66	IBC 128	TP90S4	-	3050
388,6	27	5,5	3,68	IBC 142	TP90S4	-	4050
365,7	28	1,9	3,91	IBC 102	TP90S4	-	2100
312,9	33	2,9	4,57	IBC 128	TP90S4	-	3030
301,7	34	4,4	4,74	IBC 142	TP90S4	-	4200
296,7	35	1,6	4,82	IBC 102	TP90S4	-	2150
257,7	40	2,5	5,55	IBC 128	TP90S4	-	3220
254,9	41	3,9	5,61	IBC 142	TP90S4	-	4300
250,0	42	1,5	5,72	IBC 102	TP90S4	-	2180
206,9	50	1,2	6,91	IBC 102	TP90S4	-	2240
206,9	50	2,0	6,91	IBC 128	TP90S4	-	3320
198,3	52	3,0	7,21	IBC 142	TP90S4	-	4450
161,4	64	1,0	8,86	IBC 102	TP90S4	-	2240
151,5	69	1,7	9,44	IBC 128	TP90S4	-	3400
143,4	72	2,6	9,97	IBC 142	TP90S4	-	4630
135,9	76	0,9	10,52	IBC 102	TP90S4	-	2280
129,4	80	2,5	11,05	IBC 162	TP90S4	-	7750
124,7	83	1,5	11,47	IBC 128	TP90S4	-	3500
121,3	86	2,3	11,79	IBC 142	TP90S4	-	4730
112,6	92	0,8	12,70	IBC 102	TP90S4	-	2150

1,10 kW

n2 [rpm]	M2 [Nm]	fs	i	Gear reducer	Motor Size	Motor Pole	Fr2 [N]
103,8	100	1,4	13,77	IBC 128	TP90S4	-	3400
99,9	104	2,4	14,31	IBC 162	TP90S4	-	8100
94,3	110	1,8	15,16	IBC 142	TP90S4	-	4900
78,4	132	1,4	18,23	IBC 128	TP90S4	-	3500
77,0	135	1,5	18,57	IBC 142	TP90S4	-	4850
75,5	137	2,4	18,93	IBC 162	TP90S4	-	8640
62,9	165	1,0	22,72	IBC 128	TP90S4	-	3480
62,9	165	2,4	22,75	IBC 162	TP90S4	-	8750
59,8	173	1,5	23,90	IBC 142	TP90S4	-	5050
55,1	188	2,4	25,97	IBC 162	TP90S4	-	9000
51,8	200	0,8	27,61	IBC 128	TP90S4	-	3400
50,6	205	1,4	28,26	IBC 142	TP90S4	-	5180
44,3	234	2,1	32,31	IBC 162	TP90S4	-	9400
41,6	249	0,7	34,37	IBC 128	TP90S4	-	2800
39,4	264	1,0	36,34	IBC 142	TP90S4	-	5350
39,0	356	1,4	32,31	IBC 162	TP100LR6	-	10000
31,6	328	0,8	45,23	IBC 142	TP90S4	-	5600
31,3	332	1,5	45,69	IBC 162	TP90S4	-	10000
27,6	504	1,0	45,69	IBC 162	TP100LR6	-	10600
27,2	401	0,7	36,34	IBC 142	TP100LR6	-	5300

1,50 kW

n2 [rpm]	M2 [Nm]	fs	i	Gear reducer	Motor Size	Motor Pole	Fr2 [N]
659,0	21	4,2	2,17	IBC 142	TP90L4	-	3700
647,1	22	3,6	2,21	IBC 128	TP90L4	-	2800
611,1	23	1,9	2,34	IBC 102	TP90L4	-	1910
516,2	27	3,1	2,77	IBC 128	TP90L4	-	2880
510,7	28	4,2	2,80	IBC 142	TP90L4	-	3850
488,1	29	1,8	2,93	IBC 102	TP90L4	-	1960
390,7	36	2,5	3,66	IBC 128	TP90L4	-	2990
388,6	36	4,0	3,68	IBC 142	TP90L4	-	4000
365,7	38	1,4	3,91	IBC 102	TP90L4	-	2020
312,9	45	2,1	4,57	IBC 128	TP90L4	-	2990
301,7	47	3,2	4,74	IBC 142	TP90L4	-	4130
296,7	47	1,2	4,82	IBC 102	TP90L4	-	2050
257,7	55	1,8	5,55	IBC 128	TP90L4	-	3130
254,9	55	2,9	5,61	IBC 142	TP90L4	-	4200
250,0	56	1,1	5,72	IBC 102	TP90L4	-	2080
206,9	68	0,9	6,91	IBC 102	TP90L4	-	2120
206,9	68	1,5	6,91	IBC 128	TP90L4	-	3200
198,3	71	2,2	7,21	IBC 142	TP90L4	-	4340

4.1 IBCM GEARED MOTORS (50Hz)

1,50 kW

n2 [rpm]	M2 [Nm]	fs	i	Gear reducer	Motor Size	Motor Pole	Fr2 [N]
161,4	87	0,7	8,86	IBC 102	TP90L4	-	1650
151,5	93	1,3	9,44	IBC 128	TP90L4	-	3250
143,4	98	1,9	9,97	IBC 142	TP90L4	-	4450
135,9	103	0,7	10,52	IBC 102	TP90L4	-	1900
129,4	109	1,8	11,05	IBC 162	TP90L4	-	7550
124,7	113	1,1	11,47	IBC 128	TP90L4	-	3300
121,3	116	1,7	11,79	IBC 142	TP90L4	-	4550
103,8	135	1,0	13,77	IBC 128	TP90L4	-	2700
99,9	141	1,7	14,31	IBC 162	TP90L4	-	7900
94,3	149	1,3	15,16	IBC 142	TP90L4	-	4670
78,4	179	1,0	18,23	IBC 128	TP90L4	-	2150
77,0	182	1,1	18,57	IBC 142	TP90L4	-	4500
75,5	186	1,7	18,93	IBC 162	TP90L4	-	8400
62,9	223	0,7	22,72	IBC 128	TP90L4	-	2600
62,9	224	1,7	22,75	IBC 162	TP90L4	-	8450
59,8	235	1,1	23,90	IBC 142	TP90L4	-	4300
55,1	255	1,7	25,97	IBC 162	TP90L4	-	8650
50,6	278	1,0	28,26	IBC 142	TP90L4	-	3850
44,3	317	1,5	32,31	IBC 162	TP90L4	-	9000
39,4	357	0,7	36,34	IBC 142	TP90L4	-	4200
31,3	449	1,1	45,69	IBC 162	TP90L4	-	9500
29,9	491	1,0	32,31	IBC 162	TP100L6	-	9400
21,2	695	0,8	45,69	IBC 162	TP100L6	-	8700

2,20 kW

n2 [rpm]	M2 [Nm]	fs	i	Gear reducer	Motor Size	Motor Pole	Fr2 [N]
663,6	31	3,3	2,17	IBC 142	TP100LA4/TP112MR4	-	3630
651,6	32	2,5	2,21	IBC 128	TP100LA4/TP112MR4	-	2710
648,6	32	4,1	2,22	IBC 162	TP100LA4/TP112MR4	-	6050
519,9	40	2,1	2,77	IBC 128	TP100LA4/TP112MR4	-	2790
514,3	40	3,3	2,80	IBC 142	TP100LA4/TP112MR4	-	3750
501,7	41	4,1	2,87	IBC 162	TP100LA4/TP112MR4	-	6300
393,4	53	1,8	3,66	IBC 128	TP100LA4/TP112MR4	-	2870
391,3	53	2,7	3,68	IBC 142	TP100LA4/TP112MR4	-	3880
378,9	55	4,1	3,80	IBC 162	TP100LA4/TP112MR4	-	6550
315,1	66	1,5	4,57	IBC 128	TP100LA4/TP112MR4	-	2810
315,1	66	4,1	4,57	IBC 162	TP100LA4/TP112MR4	-	6720
303,8	68	2,2	4,74	IBC 142	TP100LA4/TP112MR4	-	3990
276,4	75	3,8	5,21	IBC 162	TP100LA4/TP112MR4	-	6850
259,5	80	1,2	5,55	IBC 128	TP100LA4/TP112MR4	-	2970
256,7	81	2,0	5,61	IBC 142	TP100LA4/TP112MR4	-	4050

4.1 IBCM GEARED MOTORS (50Hz)

2,20 kW

n2 [rpm]	M2 [Nm]	fs	i	Gear reducer	Motor Size	Motor Pole	Fr2 [N]
221,9	94	3,2	6,49	IBC 162	TP100LA4/TP112MR4	-	7040
208,4	100	1,0	6,91	IBC 128	TP100LA4/TP112MR4	-	3030
199,7	104	1,5	7,21	IBC 142	TP100LA4/TP112MR4	-	4150
153,0	136	2,5	9,41	IBC 162	TP100LA4/TP112MR4	-	7300
152,5	136	0,9	9,44	IBC 128	TP100LA4/TP112MR4	-	2800
144,4	144	1,4	9,97	IBC 142	TP100LA4/TP112MR4	-	4150
134,1	155	2,2	10,74	IBC 162	TP100LA4/TP112MR4	-	7450
125,5	165	0,7	11,47	IBC 128	TP100LA4/TP112MR4	-	2450
122,1	170	1,1	11,79	IBC 142	TP100LA4/TP112MR4	-	4210
107,8	193	1,9	13,36	IBC 162	TP100LA4/TP112MR4	-	7680
95,0	218	1,0	15,16	IBC 142	TP100LA4/TP112MR4	-	4250
77,5	268	0,9	18,57	IBC 142	TP100LA4/TP112MR4	-	2000
76,1	273	1,4	18,93	IBC 162	TP100LA4/TP112MR4	-	8000
63,3	328	1,2	22,75	IBC 162	TP100LA4/TP112MR4	-	7880
60,3	344	0,7	23,90	IBC 142	TP100LA4/TP112MR4	-	2800
55,4	374	1,2	25,97	IBC 162	TP100LA4/TP112MR4	-	8030
44,6	466	1,0	32,31	IBC 162	TP100LA4/TP112MR4	-	8270
31,5	658	0,8	45,69	IBC 162	TP100LA4/TP112MR4	-	8000

3,00 kW

n2 [rpm]	M2 [Nm]	fs	i	Gear reducer	Motor Size	Motor Pole	Fr2 [N]
668,2	43	2,4	2,17	IBC 142	TP112MS4	-	3530
656,1	43	1,8	2,21	IBC 128	TP112MS4	-	2620
653,2	44	3,0	2,22	IBC 162	TP112MS4	-	5970
523,5	54	1,6	2,77	IBC 128	TP112MS4	-	2680
517,9	55	2,4	2,80	IBC 142	TP112MS4	-	3640
505,2	56	3,0	2,87	IBC 162	TP112MS4	-	6200
396,2	72	1,3	3,66	IBC 128	TP112MS4	-	2740
394,0	72	2,0	3,68	IBC 142	TP112MS4	-	3740
381,6	75	3,0	3,80	IBC 162	TP112MS4	-	6440
317,3	90	1,1	4,57	IBC 128	TP112MS4	-	2550
317,3	90	3,0	4,57	IBC 162	TP112MS4	-	6600
305,9	93	1,6	4,74	IBC 142	TP112MS4	-	3820
278,3	102	2,8	5,21	IBC 162	TP112MS4	-	6700
261,3	109	0,9	5,55	IBC 128	TP112MS4	-	2800
258,5	110	1,4	5,61	IBC 142	TP112MS4	-	3850
223,4	128	2,3	6,49	IBC 162	TP112MS4	-	6850
209,8	136	0,8	6,91	IBC 128	TP112MS4	-	2740
201,1	142	1,1	7,21	IBC 142	TP112MS4	-	3900
154,1	185	1,8	9,41	IBC 162	TP112MS4	-	7040
145,4	196	1,0	9,97	IBC 142	TP112MS4	-	3450

4.1 IBCM GEARED MOTORS (50Hz)

3,00 kW

n2 [rpm]	M2 [Nm]	fs	i	Gear reducer	Motor Size	Motor Pole	Fr2 [N]
135,0	211	1,6	10,74	IBC 162	TP112MS4	-	7150
123,0	232	0,8	11,79	IBC 142	TP112MS4	-	3000
108,5	263	1,4	13,36	IBC 162	TP112MS4	-	7300
95,6	298	0,7	15,16	IBC 142	TP112MS4	-	2800
76,6	372	1,0	18,93	IBC 162	TP112MS4	-	7500
63,7	447	0,9	22,75	IBC 162	TP112MS4	-	6200
55,8	510	0,9	25,97	IBC 162	TP112MS4	-	5500

4,00 kW

n2 [rpm]	M2 [Nm]	fs	i	Gear reducer	Motor Size	Motor Pole	Fr2 [N]
677,7	56	1,8	2,17	IBC 142	TP112M4	-	3400
665,5	57	1,4	2,21	IBC 128	TP112M4	-	2500
662,5	57	2,2	2,22	IBC 162	TP112M4	-	5870
530,9	72	1,2	2,77	IBC 128	TP112M4	-	2530
525,3	72	1,8	2,80	IBC 142	TP112M4	-	3500
512,4	74	2,2	2,87	IBC 162	TP112M4	-	6080
401,8	95	1,0	3,66	IBC 128	TP112M4	-	2570
399,7	95	1,5	3,68	IBC 142	TP112M4	-	3580
387,0	98	2,2	3,80	IBC 162	TP112M4	-	6310
321,8	118	0,8	4,57	IBC 128	TP112M4	-	1350
321,8	118	2,2	4,57	IBC 162	TP112M4	-	6430
310,3	122	1,2	4,74	IBC 142	TP112M4	-	3620
282,3	135	2,1	5,21	IBC 162	TP112M4	-	6500
265,0	143	0,7	5,55	IBC 128	TP112M4	-	2000
262,2	145	1,1	5,61	IBC 142	TP112M4	-	3640
226,6	168	1,8	6,49	IBC 162	TP112M4	-	6650
204,0	186	0,8	7,21	IBC 142	TP112M4	-	3550
156,3	243	1,4	9,41	IBC 162	TP112M4	-	6700
147,5	258	0,8	9,97	IBC 142	TP112M4	-	1450
136,9	277	1,2	10,74	IBC 162	TP112M4	-	6800
110,1	345	1,0	13,36	IBC 162	TP112M4	-	6900
77,7	489	0,8	18,93	IBC 162	TP112M4	-	5900

5,50 kW

n2 [rpm]	M2 [Nm]	fs	i	Gear reducer	Motor Size	Motor Pole	Fr2 [N]
683,4	77	2,0	2,22	IBC 162	TP132MS4	-	5740
528,7	100	2,0	2,87	IBC 162	TP132MS4	-	5900
399,3	133	2,0	3,80	IBC 162	TP132MS4	-	6100
332,0	160	1,7	4,57	IBC 162	TP132MS4	-	6200

4.1 IBCM GEARED MOTORS (50Hz)

5,50 kW

n2 [rpm]	M2 [Nm]	fs	i	Gear reducer	Motor Size	Motor Pole	Fr2 [N]
291,2	182	1,5	5,21	IBC 162	TP132MS4	-	6250
233,8	227	1,4	6,49	IBC 162	TP132MS4	-	6350
161,2	328	1,0	9,41	IBC 162	TP132MS4	-	6100
141,3	375	0,9	10,74	IBC 162	TP132MS4	-	5500
113,6	466	0,7	13,36	IBC 162	TP132MS4	-	4300

7,50 kW

n2 [rpm]	M2 [Nm]	fs	i	Gear reducer	Motor Size	Motor Pole	Fr2 [N]
678,8	106	1,4	2,22	IBC 162	TP132M4	-	5500
525,1	137	1,4	2,87	IBC 162	TP132M4	-	5650
396,6	181	1,4	3,80	IBC 162	TP132M4	-	5800
329,7	218	1,2	4,57	IBC 162	TP132M4	-	5850
289,2	248	1,1	5,21	IBC 162	TP132M4	-	5900
232,2	309	1,0	6,49	IBC 162	TP132M4	-	5900
160,1	448	0,7	9,41	IBC 162	TP132M4	-	2500

4.2 IB GEAR REDUCER - 1400 rpm

IB 84

Mn_2 [Nm]	i	Pn_1 [kW]	n2 [rpm]	Fr1 [N]	Fr2 [N]
15	2,14	1,10	672,9	360	940
19	2,75	1,10	523,6	360	930
21	3,58	0,90	402,2	500	1020
21	4,53	0,72	317,9	530	1090
21	5,49	0,60	262,3	550	1150
24	6,83	0,55	210,8	560	1190
27	8,77	0,48	164,2	570	1250
27	11,41	0,37	126,2	180	1020
31	14,63	0,33	98,4	310	1130
34	19,08	0,28	75,5	460	1330
35	24,11	0,23	59,7	520	1540
35	29,27	0,19	49,2	540	1650
37	36,36	0,16	39,6	555	1780
39	46,73	0,13	30,8	570	1930

IB 102

Mn_2 [Nm]	i	Pn_1 [kW]	n2 [rpm]	Fr1 [N]	Fr2 [N]
31	2,34	2,10	615,4	610	1820
39	2,93	2,10	491,5	610	1860
52	3,91	2,10	368,3	610	1900
55	4,82	1,80	298,8	800	1980
55	4,82	1,80	298,8	800	1980
58	5,73	1,60	251,3	830	2050
57	6,92	1,30	208,1	870	2180
62	8,86	1,10	162,5	810	2240
66	10,52	0,98	136,9	840	2330
67	12,71	0,83	113,3	870	2450
71	16,98	0,66	84,8	910	2650
86	24,61	0,55	58,5	700	2800
86	24,61	0,55	58,5	700	2800
89	29,21	0,48	49,3	810	2950
92	35,28	0,41	40,8	845	3150
84	47,13	0,28	30,6	910	3550

IB 128

Mn_2 [Nm]	i	Pn_1 [kW]	n2 [rpm]	Fr1 [N]	Fr2 [N]
51	2,21	3,60	651,6	860	2550
64	2,77	3,60	519,9	860	2600
84	3,66	3,60	393,4	860	2600

4.2 IB GEAR REDUCER - 1400 rpm

IB 128

Mn_2 [Nm]	i	Pn_1 [kW]	n2 [rpm]	Fr1 [N]	Fr2 [N]
93	4,57	3,20	315,1	1050	2200
95	5,55	2,70	259,5	1100	2850
97	6,91	2,20	208,4	1150	3000
114	9,44	1,90	152,5	1070	3100
124	11,47	1,70	125,5	1100	3200
132	13,77	1,50	104,6	850	2550
174	18,23	1,50	79,0	850	2800
159	22,72	1,10	63,4	860	3350
155	27,61	0,88	52,2	1090	3850
164	34,37	0,75	41,9	1130	4250
158	47,56	0,52	30,3	1200	4800

IB 142

Mn_2 [Nm]	i	Pn_1 [kW]	n2 [rpm]	Fr1 [N]	Fr2 [N]
55	2,17	4,00	663,6	2060	3400
71	2,80	4,00	514,3	2060	3500
94	3,68	4,00	391,3	2060	3550
121	4,74	4,00	303,8	2060	3600
125	5,61	3,50	256,7	2100	3700
152	7,21	3,30	199,7	2120	3800
190	9,97	3,00	144,4	1980	3300
188	11,79	2,50	122,1	2050	3900
212	15,16	2,20	95,0	2090	4000
248	18,57	2,10	77,5	1370	2100
274	23,90	1,80	60,3	1880	2600
288	28,26	1,60	51,0	2000	3600
278	36,34	1,20	39,6	2050	4700
253	45,23	0,88	31,8	2140	5800

4.3 IPCM GEARED MOTORS (50Hz)

0,09 kW

n2 [rpm]	M2 [Nm]	fs	i	Gear reducer	Motor Size	Motor Pole	Fr2 [N]
584,1	1	13,0	2,14	IPC 84	TS56B4	-	1130
454,5	2	13,0	2,75	IPC 84	TS56B4	-	1180
349,2	2	9,9	3,58	IPC 84	TS56B4	-	1230
275,9	3	7,9	4,53	IPC 84	TS56B4	-	1270
227,7	3	6,5	5,49	IPC 84	TS56B4	-	1320
183,0	4	5,2	6,83	IPC 84	TS56B4	-	1370
142,5	5	4,1	8,77	IPC 84	TS56B4	-	1440
109,6	7	3,3	11,41	IPC 84	TS56B4	-	1480
85,4	9	3,3	14,63	IPC 84	TS56B4	-	1560
65,5	12	3,2	19,08	IPC 84	TS56B4	-	1660
51,8	15	2,6	24,11	IPC 84	TS56B4	-	1750
42,7	18	2,1	29,27	IPC 84	TS56B4	-	1830
34,4	23	1,7	36,36	IPC 84	TS56B4	-	1920
26,7	29	1,4	46,73	IPC 84	TS56B4	-	2020
24,4	34	3,0	35,27	IPC 102	TS63A6	-	4000
23,7	35	1,3	36,36	IPC 84	TS63A6	-	2070
18,4	45	0,9	46,73	IPC 84	TS63A6	-	2170
18,2	45	2,4	47,13	IPC 102	TS63A6	-	4270

0,12 kW

n2 [rpm]	M2 [Nm]	fs	i	Gear reducer	Motor Size	Motor Pole	Fr2 [N]
630,8	2	10,7	2,14	IPC 84	TH63A4	-	1130
490,9	2	9,8	2,75	IPC 84	TH63A4	-	1170
377,1	3	7,5	3,58	IPC 84	TH63A4	-	1220
298,0	4	6,0	4,53	IPC 84	TH63A4	-	1260
245,9	5	4,9	5,49	IPC 84	TH63A4	-	1310
197,7	6	3,9	6,83	IPC 84	TH63A4	-	1360
153,9	7	3,1	8,77	IPC 84	TH63A4	-	1430
118,3	9	2,7	11,41	IPC 84	TH63A4	-	1460
113,2	10	4,8	11,93	IPC 102	TH63A4	-	2790
92,3	12	2,7	14,63	IPC 84	TH63A4	-	1520
90,3	12	4,8	14,95	IPC 102	TH63A4	-	2910
81,7	14	4,9	16,53	IPC 128	TH63A4	-	4200
70,8	16	2,4	19,08	IPC 84	TH63A4	-	1620
67,7	16	4,8	19,94	IPC 102	TH63A4	-	3120
65,3	17	4,9	20,68	IPC 128	TH63A4	-	4440
56,0	20	2,0	24,11	IPC 84	TH63A4	-	1710
54,9	20	4,5	24,60	IPC 102	TH63A4	-	3280
46,2	24	3,9	29,21	IPC 102	TH63A4	-	3440
46,1	24	1,6	29,27	IPC 84	TH63A4	-	1780
38,3	29	3,4	35,27	IPC 102	TH63A4	-	3580

4.3 IPCM GEARED MOTORS (50Hz)

0,12 kW

n2 [rpm]	M2 [Nm]	fs	i	Gear reducer	Motor Size	Motor Pole	Fr2 [N]
37,1	30	1,5	36,36	IPC 84	TH63A4	-	1860
32,6	34	4,9	41,45	IPC 128	TH63A4	-	5280
28,9	38	1,1	46,73	IPC 84	TH63A4	-	1950
28,6	39	2,7	47,13	IPC 102	TH63A4	-	3840
26,2	42	4,9	51,59	IPC 128	TH63A4	-	5580
24,7	45	2,3	35,27	IPC 102	TH63B6	-	3930
23,9	46	1,0	36,36	IPC 84	TH63B6	-	1970
18,9	59	3,3	71,40	IPC 128	TH63A4	-	6040
18,6	59	0,7	46,73	IPC 84	TH63B6	-	2050
18,5	60	1,8	47,13	IPC 102	TH63B6	-	4190
13,5	82	2,0	100,11	IPC 128	TH63A4	-	6530

0,18 kW

n2 [rpm]	M2 [Nm]	fs	i	Gear reducer	Motor Size	Motor Pole	Fr2 [N]
635,5	3	7,2	2,14	IPC 84	TH63B4	-	1120
494,5	3	6,7	2,75	IPC 84	TH63B4	-	1160
379,9	4	5,1	3,58	IPC 84	TH63B4	-	1210
300,2	5	4,1	4,53	IPC 84	TH63B4	-	1250
247,7	7	3,3	5,49	IPC 84	TH63B4	-	1290
199,1	8	2,7	6,83	IPC 84	TH63B4	-	1340
155,1	11	2,1	8,77	IPC 84	TH63B4	-	1400
119,2	14	1,8	11,41	IPC 84	TH63B4	-	1400
114,0	14	3,2	11,93	IPC 102	TH63B4	-	2740
93,0	18	1,8	14,63	IPC 84	TH63B4	-	1460
91,0	18	3,2	14,95	IPC 102	TH63B4	-	2860
82,3	20	3,3	16,53	IPC 128	TH63B4	-	4150
71,3	23	1,6	19,08	IPC 84	TH63B4	-	1540
68,2	24	3,2	19,94	IPC 102	TH63B4	-	3060
65,8	25	3,3	20,68	IPC 128	TH63B4	-	4370
56,4	29	1,3	24,11	IPC 84	TH63B4	-	1610
55,3	30	3,1	24,60	IPC 102	TH63B4	-	3220
46,6	35	2,7	29,21	IPC 102	TH63B4	-	3360
46,5	35	1,1	29,27	IPC 84	TH63B4	-	1670
38,6	43	2,3	35,27	IPC 102	TH63B4	-	3500
37,4	44	1,0	36,36	IPC 84	TH63B4	-	1730
32,8	50	3,3	41,45	IPC 128	TH63B4	-	5190
29,1	57	0,7	46,73	IPC 84	TH63B4	-	1730
28,9	57	1,8	47,13	IPC 102	TH63B4	-	3730
26,4	62	3,3	51,59	IPC 128	TH63B4	-	5450
25,5	66	1,6	35,27	IPC 102	TH71A6	-	3790
19,1	88	1,4	47,13	IPC 102	TH71A6	-	4000

4.3 IPCM GEARED MOTORS (50Hz)

0,18 kW

n2 [rpm]	M2 [Nm]	fs	i	Gear reducer	Motor Size	Motor Pole	Fr2 [N]
19,0	86	2,2	71,40	IPC 128	TH63B4	-	5870
14,0	121	1,4	100,11	IPC 128	TH63B4	-	6320

0,25 kW

n2 [rpm]	M2 [Nm]	fs	i	Gear reducer	Motor Size	Motor Pole	Fr2 [N]
630,8	4	5,6	2,14	IPC 84	TH63D4/TH71A4	-	1100
610,9	4	8,8	2,21	IPC 128	TH63D4/TH71A4	-	2940
576,9	4	8,4	2,34	IPC 102	TH63D4/TH71A4	-	2090
490,9	5	4,8	2,75	IPC 84	TH63D4/TH71A4	-	1140
487,4	5	8,8	2,77	IPC 128	TH63D4/TH71A4	-	3050
460,8	5	8,4	2,93	IPC 102	TH63D4/TH71A4	-	2170
377,1	6	3,6	3,58	IPC 84	TH63D4/TH71A4	-	1190
368,9	6	8,8	3,66	IPC 128	TH63D4/TH71A4	-	3190
345,3	7	8,0	3,91	IPC 102	TH63D4/TH71A4	-	2270
298,0	8	2,9	4,53	IPC 84	TH63D4/TH71A4	-	1230
295,4	8	8,8	4,57	IPC 128	TH63D4/TH71A4	-	3290
280,1	8	7,2	4,82	IPC 102	TH63D4/TH71A4	-	2340
245,9	9	2,4	5,49	IPC 84	TH63D4/TH71A4	-	1260
243,2	9	8,8	5,55	IPC 128	TH63D4/TH71A4	-	3400
236,0	10	6,4	5,72	IPC 102	TH63D4/TH71A4	-	2410
197,7	12	1,9	6,83	IPC 84	TH63D4/TH71A4	-	1310
195,4	12	5,2	6,91	IPC 102	TH63D4/TH71A4	-	2490
195,4	12	8,8	6,91	IPC 128	TH63D4/TH71A4	-	3530
153,9	15	1,5	8,77	IPC 84	TH63D4/TH71A4	-	1360
152,4	15	4,4	8,86	IPC 102	TH63D4/TH71A4	-	2600
143,0	16	5,6	9,44	IPC 128	TH63D4/TH71A4	-	3740
128,3	18	3,9	10,52	IPC 102	TH63D4/TH71A4	-	2690
118,3	19	1,5	11,41	IPC 84	TH63D4/TH71A4	-	1330
117,7	19	5,6	11,47	IPC 128	TH63D4/TH71A4	-	3890
106,3	22	3,4	12,70	IPC 102	TH63D4/TH71A4	-	2780
98,0	23	2,8	13,77	IPC 128	TH63D4/TH71A4	-	3990
92,3	25	1,4	14,63	IPC 84	TH63D4/TH71A4	-	1380
81,7	28	2,4	16,53	IPC 128	TH63D4/TH71A4	-	4100
79,6	29	2,6	16,97	IPC 102	TH63D4/TH71A4	-	2930
74,1	31	2,8	18,23	IPC 128	TH63D4/TH71A4	-	4200
70,8	32	1,2	19,08	IPC 84	TH63D4/TH71A4	-	1450
65,3	35	2,4	20,68	IPC 128	TH63D4/TH71A4	-	4300
59,4	39	2,8	22,72	IPC 128	TH63D4/TH71A4	-	4430
56,0	41	1,0	24,11	IPC 84	TH63D4/TH71A4	-	1480
54,9	42	2,2	24,60	IPC 102	TH63D4/TH71A4	-	3140
48,9	47	2,8	27,61	IPC 128	TH63D4/TH71A4	-	4650

4.3 IPCM GEARED MOTORS (50Hz)

0,25 kW

n2 [rpm]	M2 [Nm]	fs	i	Gear reducer	Motor Size	Motor Pole	Fr2 [N]
46,2	50	1,9	29,21	IPC 102	TH63D4/TH71A4	-	3270
46,1	50	0,8	29,27	IPC 84	TH63D4/TH71A4	-	1370
39,3	58	2,7	34,37	IPC 128	TH63D4/TH71A4	-	4900
38,3	60	1,7	35,27	IPC 102	TH63D4/TH71A4	-	3390
37,1	62	0,7	36,36	IPC 84	TH63D4/TH71A4	-	1580
32,6	70	2,4	41,45	IPC 128	TH63D4/TH71A4	-	5070
28,6	80	1,5	47,13	IPC 102	TH63D4/TH71A4	-	3590
28,4	81	2,1	47,56	IPC 128	TH63D4/TH71A4	-	5260
26,2	88	2,4	51,59	IPC 128	TH63D4/TH71A4	-	5330
25,5	93	1,1	35,27	IPC 102	TH71B6	-	3630
20,2	113	1,6	66,69	IPC 128	TH63D4/TH71A4	-	5650
19,1	124	1,0	47,13	IPC 102	TH71B6	-	2900
18,9	121	1,6	71,40	IPC 128	TH63D4/TH71A4	-	5700
13,5	170	1,0	100,11	IPC 128	TH63D4/TH71A4	-	6080

0,37 kW

n2 [rpm]	M2 [Nm]	fs	i	Gear reducer	Motor Size	Motor Pole	Fr2 [N]
654,2	5	3,8	2,14	IPC 84	TH71B4	-	1080
633,5	5	5,9	2,21	IPC 128	TH71B4	-	2930
598,3	6	5,7	2,34	IPC 102	TH71B4	-	2070
509,1	7	3,2	2,75	IPC 84	TH71B4	-	1120
505,4	7	5,9	2,77	IPC 128	TH71B4	-	3030
477,8	7	5,7	2,93	IPC 102	TH71B4	-	2150
391,1	9	2,5	3,58	IPC 84	TH71B4	-	1160
382,5	9	5,9	3,66	IPC 128	TH71B4	-	3170
358,1	10	5,4	3,91	IPC 102	TH71B4	-	2240
309,1	11	2,0	4,53	IPC 84	TH71B4	-	1190
306,3	11	5,9	4,57	IPC 128	TH71B4	-	3260
290,5	12	4,9	4,82	IPC 102	TH71B4	-	2310
255,0	14	1,6	5,49	IPC 84	TH71B4	-	1220
252,3	14	5,9	5,55	IPC 128	TH71B4	-	3380
244,8	14	4,3	5,72	IPC 102	TH71B4	-	2380
205,0	17	1,3	6,83	IPC 84	TH71B4	-	1260
202,6	17	3,5	6,91	IPC 102	TH71B4	-	2460
202,6	17	5,9	6,91	IPC 128	TH71B4	-	3500
159,6	22	1,0	8,77	IPC 84	TH71B4	-	1300
158,0	22	3,0	8,86	IPC 102	TH71B4	-	2550
148,3	23	3,8	9,44	IPC 128	TH71B4	-	3700
133,1	26	2,6	10,52	IPC 102	TH71B4	-	2630
122,7	28	1,0	11,41	IPC 84	TH71B4	-	1070
122,1	28	3,8	11,47	IPC 128	TH71B4	-	3830

4.3 IPCM GEARED MOTORS (50Hz)

0,37 kW

n2 [rpm]	M2 [Nm]	fs	i	Gear reducer	Motor Size	Motor Pole	Fr2 [N]
110,2	31	2,3	12,70	IPC 102	TH71B4	-	2710
101,7	34	1,9	13,77	IPC 128	TH71B4	-	3900
95,7	36	1,0	14,63	IPC 84	TH71B4	-	950
84,7	41	1,6	16,53	IPC 128	TH71B4	-	4000
82,5	42	1,8	16,97	IPC 102	TH71B4	-	2850
76,8	45	1,9	18,23	IPC 128	TH71B4	-	4100
73,4	47	0,8	19,08	IPC 84	TH71B4	-	790
67,7	51	1,6	20,68	IPC 128	TH71B4	-	4190
61,6	56	1,9	22,72	IPC 128	TH71B4	-	4330
58,1	60	0,7	24,11	IPC 84	TH71B4	-	970
56,9	61	1,5	24,60	IPC 102	TH71B4	-	3000
50,7	68	1,9	27,61	IPC 128	TH71B4	-	4500
47,9	72	1,3	29,21	IPC 102	TH71B4	-	3100
40,7	85	1,8	34,37	IPC 128	TH71B4	-	4740
39,7	87	1,1	35,27	IPC 102	TH71B4	-	3200
33,8	103	1,6	41,45	IPC 128	TH71B4	-	4880
29,7	117	1,0	47,13	IPC 102	TH71B4	-	3000
29,4	118	1,4	47,56	IPC 128	TH71B4	-	5050
27,9	125	4,1	32,31	IPC 162	TH71C6/TH80A6	-	11200
27,1	128	1,6	51,59	IPC 128	TH71B4	-	5100
26,6	133	1,4	34,37	IPC 128	TH71C6/TH80A6	-	5100
25,5	136	0,8	35,27	IPC 102	TH71C6/TH80A6	-	2600
24,8	140	2,0	36,34	IPC 142	TH71C6/TH80A6	-	6900
21,0	165	1,1	66,69	IPC 128	TH71B4	-	5380
19,9	174	1,7	45,23	IPC 142	TH71C6/TH80A6	-	7200
19,7	176	3,1	45,69	IPC 162	TH71C6/TH80A6	-	12100
19,6	177	1,1	71,40	IPC 128	TH71B4	-	5400
19,4	183	1,1	47,56	IPC 128	TH71C6/TH80A6	-	5400
19,1	182	0,7	47,13	IPC 102	TH71C6/TH80A6	-	2100
14,0	248	0,7	100,11	IPC 128	TH71B4	-	4800

0,55 kW

n2 [rpm]	M2 [Nm]	fs	i	Gear reducer	Motor Size	Motor Pole	Fr2 [N]
633,5	8	6,7	2,21	IPC 128	TH71C4/TH80A4	-	2910
598,3	8	5,5	2,34	IPC 102	TH71C4/TH80A4	-	2050
505,4	10	6,7	2,77	IPC 128	TH71C4/TH80A4	-	3010
477,8	11	4,9	2,93	IPC 102	TH71C4/TH80A4	-	2120
382,5	13	6,7	3,66	IPC 128	TH71C4/TH80A4	-	3140
358,1	14	3,8	3,91	IPC 102	TH71C4/TH80A4	-	2210
306,3	17	5,8	4,57	IPC 128	TH71C4/TH80A4	-	3220
290,5	17	3,3	4,82	IPC 102	TH71C4/TH80A4	-	2270

4.3 IPCM GEARED MOTORS (50Hz)

0,55 kW

n2 [rpm]	M2 [Nm]	fs	i	Gear reducer	Motor Size	Motor Pole	Fr2 [N]
252,3	20	4,9	5,55	IPC 128	TH71C4/TH80A4	-	3340
244,8	21	2,9	5,72	IPC 102	TH71C4/TH80A4	-	2330
202,6	25	2,4	6,91	IPC 102	TH71C4/TH80A4	-	2400
202,6	25	4,0	6,91	IPC 128	TH71C4/TH80A4	-	3460
158,0	32	2,0	8,86	IPC 102	TH71C4/TH80A4	-	2470
148,3	34	3,5	9,44	IPC 128	TH71C4/TH80A4	-	3630
133,1	38	1,8	10,52	IPC 102	TH71C4/TH80A4	-	2550
127,7	40	2,4	10,96	IPC 142	TH71C4/TH80A4	-	4850
126,7	40	4,9	11,05	IPC 162	TH71C4/TH80A4	-	8550
122,1	42	2,9	11,47	IPC 128	TH71C4/TH80A4	-	3750
110,2	46	1,5	12,70	IPC 102	TH71C4/TH80A4	-	2610
101,7	50	2,0	13,77	IPC 128	TH71C4/TH80A4	-	3790
99,1	51	2,2	14,13	IPC 142	TH71C4/TH80A4	-	5080
97,8	52	4,7	14,31	IPC 162	TH71C4/TH80A4	-	8400
84,7	60	1,5	16,53	IPC 128	TH71C4/TH80A4	-	3830
82,5	62	1,2	16,97	IPC 102	TH71C4/TH80A4	-	2720
76,8	66	2,0	18,23	IPC 128	TH71C4/TH80A4	-	3960
75,4	67	2,2	18,57	IPC 142	TH71C4/TH80A4	-	5320
74,0	69	4,7	18,93	IPC 162	TH71C4/TH80A4	-	8950
67,7	75	1,5	20,68	IPC 128	TH71C4/TH80A4	-	4000
61,6	82	1,8	22,72	IPC 128	TH71C4/TH80A4	-	4150
61,5	83	4,7	22,75	IPC 162	TH71C4/TH80A4	-	9200
58,6	87	2,2	23,90	IPC 142	TH71C4/TH80A4	-	5600
56,9	89	1,0	24,60	IPC 102	TH71C4/TH80A4	-	2790
53,9	94	4,7	25,97	IPC 162	TH71C4/TH80A4	-	9450
50,7	100	1,6	27,61	IPC 128	TH71C4/TH80A4	-	4330
49,5	103	2,2	28,26	IPC 142	TH71C4/TH80A4	-	5800
47,9	106	0,9	29,21	IPC 102	TH71C4/TH80A4	-	2750
43,3	117	4,2	32,31	IPC 162	TH71C4/TH80A4	-	10000
40,7	125	1,4	34,37	IPC 128	TH71C4/TH80A4	-	4500
39,7	128	0,8	35,27	IPC 102	TH71C4/TH80A4	-	3000
38,5	132	2,0	36,34	IPC 142	TH71C4/TH80A4	-	6100
33,8	150	1,3	41,45	IPC 128	TH71C4/TH80A4	-	4590
31,0	164	1,7	45,23	IPC 142	TH71C4/TH80A4	-	6380
30,6	166	3,1	45,69	IPC 162	TH71C4/TH80A4	-	10800
29,7	171	0,7	47,13	IPC 102	TH71C4/TH80A4	-	2000
29,4	173	1,0	47,56	IPC 128	TH71C4/TH80A4	-	4750
29,3	184	2,8	32,31	IPC 162	TH80B6	-	10900
27,1	187	1,1	51,59	IPC 128	TH71C4/TH80A4	-	4740
26,0	207	1,3	36,34	IPC 142	TH80B6	-	6530
21,0	242	0,7	66,69	IPC 128	TH71C4/TH80A4	-	4800
20,9	258	1,1	45,23	IPC 142	TH80B6	-	6750

4.3 IPCM GEARED MOTORS (50Hz)

0,55 kW

n2 [rpm]	M2 [Nm]	fs	i	Gear reducer	Motor Size	Motor Pole	Fr2 [N]
20,7	260	2,1	45,69	IPC 162	TH80B6	-	11700
19,6	259	0,7	71,40	IPC 128	TH71C4/TH80A4	-	4400

0,75 kW

n2 [rpm]	M2 [Nm]	fs	i	Gear reducer	Motor Size	Motor Pole	Fr2 [N]
651,6	11	4,9	2,21	IPC 128	TP80B4	-	2880
615,4	11	4,0	2,34	IPC 102	TP80B4	-	2020
519,9	14	4,9	2,77	IPC 128	TP80B4	-	2980
491,5	14	3,6	2,93	IPC 102	TP80B4	-	2090
393,4	18	4,9	3,66	IPC 128	TP80B4	-	3100
368,3	19	2,8	3,91	IPC 102	TP80B4	-	2170
315,1	22	4,3	4,57	IPC 128	TP80B4	-	3170
298,8	24	2,4	4,82	IPC 102	TP80B4	-	2230
259,5	27	3,6	5,55	IPC 128	TP80B4	-	3300
251,7	28	2,1	5,72	IPC 102	TP80B4	-	2280
208,4	34	1,7	6,91	IPC 102	TP80B4	-	2340
208,4	34	2,9	6,91	IPC 128	TP80B4	-	3400
162,5	44	1,5	8,86	IPC 102	TP80B4	-	2390
152,5	46	2,5	9,44	IPC 128	TP80B4	-	3550
136,9	52	1,3	10,52	IPC 102	TP80B4	-	2450
131,4	54	1,7	10,96	IPC 142	TP80B4	-	4730
130,3	54	3,6	11,05	IPC 162	TP80B4	-	7900
125,5	56	2,1	11,47	IPC 128	TP80B4	-	3660
113,4	62	1,1	12,70	IPC 102	TP80B4	-	2500
104,6	68	1,5	13,77	IPC 128	TP80B4	-	3650
101,9	69	1,6	14,13	IPC 142	TP80B4	-	4950
100,6	70	3,5	14,31	IPC 162	TP80B4	-	8300
87,1	81	1,1	16,53	IPC 128	TP80B4	-	3650
84,9	83	0,9	16,97	IPC 102	TP80B4	-	2580
79,0	90	1,5	18,23	IPC 128	TP80B4	-	3800
77,5	91	1,6	18,57	IPC 142	TP80B4	-	5150
76,1	93	3,5	18,93	IPC 162	TP80B4	-	8830
69,6	102	1,1	20,68	IPC 128	TP80B4	-	3800
63,4	112	1,3	22,72	IPC 128	TP80B4	-	3950
63,3	112	3,5	22,75	IPC 162	TP80B4	-	9000
60,3	117	1,6	23,90	IPC 142	TP80B4	-	5400
58,5	121	0,7	24,60	IPC 102	TP80B4	-	2600
55,4	128	3,5	25,97	IPC 162	TP80B4	-	9300
52,2	136	1,2	27,61	IPC 128	TP80B4	-	4100
51,0	139	1,6	28,26	IPC 142	TP80B4	-	5570
49,3	144	0,7	29,21	IPC 102	TP80B4	-	2700

4.3 IPCM GEARED MOTORS (50Hz)

0,75 kW

n2 [rpm]	M2 [Nm]	fs	i	Gear reducer	Motor Size	Motor Pole	Fr2 [N]
44,6	159	3,1	32,31	IPC 162	TP80B4	-	9750
41,9	169	1,0	34,37	IPC 128	TP80B4	-	4250
39,6	179	1,5	36,34	IPC 142	TP80B4	-	5850
34,7	204	0,9	41,45	IPC 128	TP80B4	-	4030
31,8	222	1,2	45,23	IPC 142	TP80B4	-	6050
31,5	224	2,3	45,69	IPC 162	TP80B4	-	10500
30,3	234	0,7	47,56	IPC 128	TP80B4	-	4500
30,3	243	2,0	32,31	IPC 162	TP90S6	-	10600
27,9	253	0,8	51,59	IPC 128	TP80B4	-	4400
26,9	273	1,0	36,34	IPC 142	TP90S6	-	6100
21,6	340	0,8	45,23	IPC 142	TP90S6	-	6200
21,4	343	1,5	45,69	IPC 162	TP90S6	-	11300

1,10 kW

n2 [rpm]	M2 [Nm]	fs	i	Gear reducer	Motor Size	Motor Pole	Fr2 [N]
659,0	16	5,7	2,17	IPC 142	TP90S4	-	3760
647,1	16	4,9	2,21	IPC 128	TP90S4	-	2840
611,1	17	2,6	2,34	IPC 102	TP90S4	-	1970
516,2	20	4,3	2,77	IPC 128	TP90S4	-	2940
510,7	20	5,7	2,80	IPC 142	TP90S4	-	3900
488,1	21	2,5	2,93	IPC 102	TP90S4	-	2030
390,7	27	3,5	3,66	IPC 128	TP90S4	-	3050
388,6	27	5,5	3,68	IPC 142	TP90S4	-	4050
365,7	28	1,9	3,91	IPC 102	TP90S4	-	2100
312,9	33	2,9	4,57	IPC 128	TP90S4	-	3030
301,7	34	4,4	4,74	IPC 142	TP90S4	-	4200
296,7	35	1,6	4,82	IPC 102	TP90S4	-	2150
257,7	40	2,5	5,55	IPC 128	TP90S4	-	3220
254,9	41	3,9	5,61	IPC 142	TP90S4	-	4300
250,0	42	1,5	5,72	IPC 102	TP90S4	-	2180
206,9	50	1,2	6,91	IPC 102	TP90S4	-	2240
206,9	50	2,0	6,91	IPC 128	TP90S4	-	3320
198,3	52	3,0	7,21	IPC 142	TP90S4	-	4450
161,4	64	1,0	8,86	IPC 102	TP90S4	-	2240
151,5	69	1,7	9,44	IPC 128	TP90S4	-	3400
143,4	72	2,6	9,97	IPC 142	TP90S4	-	4630
135,9	76	0,9	10,52	IPC 102	TP90S4	-	2280
129,4	80	2,5	11,05	IPC 162	TP90S4	-	7750
124,7	83	1,5	11,47	IPC 128	TP90S4	-	3500
121,3	86	2,3	11,79	IPC 142	TP90S4	-	4730
112,6	92	0,8	12,70	IPC 102	TP90S4	-	2150

4.3 IPCM GEARED MOTORS (50Hz)

1,10 kW

n2 [rpm]	M2 [Nm]	fs	i	Gear reducer	Motor Size	Motor Pole	Fr2 [N]
103,8	100	1,4	13,77	IPC 128	TP90S4	-	3400
99,9	104	2,4	14,31	IPC 162	TP90S4	-	8100
94,3	110	1,8	15,16	IPC 142	TP90S4	-	4900
78,4	132	1,4	18,23	IPC 128	TP90S4	-	3500
77,0	135	1,5	18,57	IPC 142	TP90S4	-	4850
75,5	137	2,4	18,93	IPC 162	TP90S4	-	8640
62,9	165	1,0	22,72	IPC 128	TP90S4	-	3480
62,9	165	2,4	22,75	IPC 162	TP90S4	-	8750
59,8	173	1,5	23,90	IPC 142	TP90S4	-	5050
55,1	188	2,4	25,97	IPC 162	TP90S4	-	9000
51,8	200	0,8	27,61	IPC 128	TP90S4	-	3400
50,6	205	1,4	28,26	IPC 142	TP90S4	-	5180
44,3	234	2,1	32,31	IPC 162	TP90S4	-	9400
41,6	249	0,7	34,37	IPC 128	TP90S4	-	2800
39,4	264	1,0	36,34	IPC 142	TP90S4	-	5350
39,0	356	1,4	32,31	IPC 162	TP100LR6	-	10000
31,6	328	0,8	45,23	IPC 142	TP90S4	-	5600
31,3	332	1,5	45,69	IPC 162	TP90S4	-	10000
27,6	504	1,0	45,69	IPC 162	TP100LR6	-	10600
27,2	401	0,7	36,34	IPC 142	TP100LR6	-	5300

1,50 kW

n2 [rpm]	M2 [Nm]	fs	i	Gear reducer	Motor Size	Motor Pole	Fr2 [N]
659,0	21	4,2	2,17	IPC 142	TP90L4	-	3700
647,1	22	3,6	2,21	IPC 128	TP90L4	-	2800
611,1	23	1,9	2,34	IPC 102	TP90L4	-	1910
516,2	27	3,1	2,77	IPC 128	TP90L4	-	2880
510,7	28	4,2	2,80	IPC 142	TP90L4	-	3850
488,1	29	1,8	2,93	IPC 102	TP90L4	-	1960
390,7	36	2,5	3,66	IPC 128	TP90L4	-	2990
388,6	36	4,0	3,68	IPC 142	TP90L4	-	4000
365,7	38	1,4	3,91	IPC 102	TP90L4	-	2020
312,9	45	2,1	4,57	IPC 128	TP90L4	-	2990
301,7	47	3,2	4,74	IPC 142	TP90L4	-	4130
296,7	47	1,2	4,82	IPC 102	TP90L4	-	2050
257,7	55	1,8	5,55	IPC 128	TP90L4	-	3130
254,9	55	2,9	5,61	IPC 142	TP90L4	-	4200
250,0	56	1,1	5,72	IPC 102	TP90L4	-	2080
206,9	68	0,9	6,91	IPC 102	TP90L4	-	2120
206,9	68	1,5	6,91	IPC 128	TP90L4	-	3200
198,3	71	2,2	7,21	IPC 142	TP90L4	-	4340

4.3 IPCM GEARED MOTORS (50Hz)

1,50 kW

n2 [rpm]	M2 [Nm]	fs	i	Gear reducer	Motor Size	Motor Pole	Fr2 [N]
161,4	87	0,7	8,86	IPC 102	TP90L4	-	1650
151,5	93	1,3	9,44	IPC 128	TP90L4	-	3250
143,4	98	1,9	9,97	IPC 142	TP90L4	-	4450
135,9	103	0,7	10,52	IPC 102	TP90L4	-	1900
129,4	109	1,8	11,05	IPC 162	TP90L4	-	7550
124,7	113	1,1	11,47	IPC 128	TP90L4	-	3300
121,3	116	1,7	11,79	IPC 142	TP90L4	-	4550
103,8	135	1,0	13,77	IPC 128	TP90L4	-	2700
99,9	141	1,7	14,31	IPC 162	TP90L4	-	7900
94,3	149	1,3	15,16	IPC 142	TP90L4	-	4670
78,4	179	1,0	18,23	IPC 128	TP90L4	-	2150
77,0	182	1,1	18,57	IPC 142	TP90L4	-	4500
75,5	186	1,7	18,93	IPC 162	TP90L4	-	8400
62,9	223	0,7	22,72	IPC 128	TP90L4	-	2600
62,9	224	1,7	22,75	IPC 162	TP90L4	-	8450
59,8	235	1,1	23,90	IPC 142	TP90L4	-	4300
55,1	255	1,7	25,97	IPC 162	TP90L4	-	8650
50,6	278	1,0	28,26	IPC 142	TP90L4	-	3850
44,3	317	1,5	32,31	IPC 162	TP90L4	-	9000
39,4	357	0,7	36,34	IPC 142	TP90L4	-	4200
31,3	449	1,1	45,69	IPC 162	TP90L4	-	9500
29,9	491	1,0	32,31	IPC 162	TP100L6	-	9400
21,2	695	0,8	45,69	IPC 162	TP100L6	-	8700

2,20 kW

n2 [rpm]	M2 [Nm]	fs	i	Gear reducer	Motor Size	Motor Pole	Fr2 [N]
663,6	31	3,3	2,17	IPC 142	TP100LA4/TP112MR4	-	3630
651,6	32	2,5	2,21	IPC 128	TP100LA4/TP112MR4	-	2710
648,6	32	4,1	2,22	IPC 162	TP100LA4/TP112MR4	-	6050
519,9	40	2,1	2,77	IPC 128	TP100LA4/TP112MR4	-	2790
514,3	40	3,3	2,80	IPC 142	TP100LA4/TP112MR4	-	3750
501,7	41	4,1	2,87	IPC 162	TP100LA4/TP112MR4	-	6300
393,4	53	1,8	3,66	IPC 128	TP100LA4/TP112MR4	-	2870
391,3	53	2,7	3,68	IPC 142	TP100LA4/TP112MR4	-	3880
378,9	55	4,1	3,80	IPC 162	TP100LA4/TP112MR4	-	6550
315,1	66	1,5	4,57	IPC 128	TP100LA4/TP112MR4	-	2810
315,1	66	4,1	4,57	IPC 162	TP100LA4/TP112MR4	-	6720
303,8	68	2,2	4,74	IPC 142	TP100LA4/TP112MR4	-	3990
276,4	75	3,8	5,21	IPC 162	TP100LA4/TP112MR4	-	6850
259,5	80	1,2	5,55	IPC 128	TP100LA4/TP112MR4	-	2970
256,7	81	2,0	5,61	IPC 142	TP100LA4/TP112MR4	-	4050

4.3 IPCM GEARED MOTORS (50Hz)

2,20 kW

n2 [rpm]	M2 [Nm]	fs	i	Gear reducer	Motor Size	Motor Pole	Fr2 [N]
221,9	94	3,2	6,49	IPC 162	TP100LA4/TP112MR4	-	7040
208,4	100	1,0	6,91	IPC 128	TP100LA4/TP112MR4	-	3030
199,7	104	1,5	7,21	IPC 142	TP100LA4/TP112MR4	-	4150
153,0	136	2,5	9,41	IPC 162	TP100LA4/TP112MR4	-	7300
152,5	136	0,9	9,44	IPC 128	TP100LA4/TP112MR4	-	2800
144,4	144	1,4	9,97	IPC 142	TP100LA4/TP112MR4	-	4150
134,1	155	2,2	10,74	IPC 162	TP100LA4/TP112MR4	-	7450
125,5	165	0,7	11,47	IPC 128	TP100LA4/TP112MR4	-	2450
122,1	170	1,1	11,79	IPC 142	TP100LA4/TP112MR4	-	4210
107,8	193	1,9	13,36	IPC 162	TP100LA4/TP112MR4	-	7680
95,0	218	1,0	15,16	IPC 142	TP100LA4/TP112MR4	-	4250
77,5	268	0,9	18,57	IPC 142	TP100LA4/TP112MR4	-	2000
76,1	273	1,4	18,93	IPC 162	TP100LA4/TP112MR4	-	8000
63,3	328	1,2	22,75	IPC 162	TP100LA4/TP112MR4	-	7880
60,3	344	0,7	23,90	IPC 142	TP100LA4/TP112MR4	-	2800
55,4	374	1,2	25,97	IPC 162	TP100LA4/TP112MR4	-	8030
44,6	466	1,0	32,31	IPC 162	TP100LA4/TP112MR4	-	8270
31,5	658	0,8	45,69	IPC 162	TP100LA4/TP112MR4	-	8000

3,00 kW

n2 [rpm]	M2 [Nm]	fs	i	Gear reducer	Motor Size	Motor Pole	Fr2 [N]
668,2	43	2,4	2,17	IPC 142	TP112MS4	-	3530
656,1	43	1,8	2,21	IPC 128	TP112MS4	-	2620
653,2	44	3,0	2,22	IPC 162	TP112MS4	-	5970
523,5	54	1,6	2,77	IPC 128	TP112MS4	-	2680
517,9	55	2,4	2,80	IPC 142	TP112MS4	-	3640
505,2	56	3,0	2,87	IPC 162	TP112MS4	-	6200
396,2	72	1,3	3,66	IPC 128	TP112MS4	-	2740
394,0	72	2,0	3,68	IPC 142	TP112MS4	-	3740
381,6	75	3,0	3,80	IPC 162	TP112MS4	-	6440
317,3	90	1,1	4,57	IPC 128	TP112MS4	-	2550
317,3	90	3,0	4,57	IPC 162	TP112MS4	-	6600
305,9	93	1,6	4,74	IPC 142	TP112MS4	-	3820
278,3	102	2,8	5,21	IPC 162	TP112MS4	-	6700
261,3	109	0,9	5,55	IPC 128	TP112MS4	-	2800
258,5	110	1,4	5,61	IPC 142	TP112MS4	-	3850
223,4	128	2,3	6,49	IPC 162	TP112MS4	-	6850
209,8	136	0,8	6,91	IPC 128	TP112MS4	-	2740
201,1	142	1,1	7,21	IPC 142	TP112MS4	-	3900
154,1	185	1,8	9,41	IPC 162	TP112MS4	-	7040
145,4	196	1,0	9,97	IPC 142	TP112MS4	-	3450

4.3 IPCM GEARED MOTORS (50Hz)

3,00 kW

n2 [rpm]	M2 [Nm]	fs	i	Gear reducer	Motor Size	Motor Pole	Fr2 [N]
135,0	211	1,6	10,74	IPC 162	TP112MS4	-	7150
123,0	232	0,8	11,79	IPC 142	TP112MS4	-	3000
108,5	263	1,4	13,36	IPC 162	TP112MS4	-	7300
95,6	298	0,7	15,16	IPC 142	TP112MS4	-	2800
76,6	372	1,0	18,93	IPC 162	TP112MS4	-	7500
63,7	447	0,9	22,75	IPC 162	TP112MS4	-	6200
55,8	510	0,9	25,97	IPC 162	TP112MS4	-	5500

4,00 kW

n2 [rpm]	M2 [Nm]	fs	i	Gear reducer	Motor Size	Motor Pole	Fr2 [N]
677,7	56	1,8	2,17	IPC 142	TP112M4	-	3400
665,5	57	1,4	2,21	IPC 128	TP112M4	-	2500
662,5	57	2,2	2,22	IPC 162	TP112M4	-	5870
530,9	72	1,2	2,77	IPC 128	TP112M4	-	2530
525,3	72	1,8	2,80	IPC 142	TP112M4	-	3500
512,4	74	2,2	2,87	IPC 162	TP112M4	-	6080
401,8	95	1,0	3,66	IPC 128	TP112M4	-	2570
399,7	95	1,5	3,68	IPC 142	TP112M4	-	3580
387,0	98	2,2	3,80	IPC 162	TP112M4	-	6310
321,8	118	0,8	4,57	IPC 128	TP112M4	-	1350
321,8	118	2,2	4,57	IPC 162	TP112M4	-	6430
310,3	122	1,2	4,74	IPC 142	TP112M4	-	3620
282,3	135	2,1	5,21	IPC 162	TP112M4	-	6500
265,0	143	0,7	5,55	IPC 128	TP112M4	-	2000
262,2	145	1,1	5,61	IPC 142	TP112M4	-	3640
226,6	168	1,8	6,49	IPC 162	TP112M4	-	6650
204,0	186	0,8	7,21	IPC 142	TP112M4	-	3550
156,3	243	1,4	9,41	IPC 162	TP112M4	-	6700
147,5	258	0,8	9,97	IPC 142	TP112M4	-	1450
136,9	277	1,2	10,74	IPC 162	TP112M4	-	6800
110,1	345	1,0	13,36	IPC 162	TP112M4	-	6900
77,7	489	0,8	18,93	IPC 162	TP112M4	-	5900

5,50 kW

n2 [rpm]	M2 [Nm]	fs	i	Gear reducer	Motor Size	Motor Pole	Fr2 [N]
683,4	77	2,0	2,22	IPC 162	TP132MS4	-	5740
528,7	100	2,0	2,87	IPC 162	TP132MS4	-	5900
399,3	133	2,0	3,80	IPC 162	TP132MS4	-	6100
332,0	160	1,7	4,57	IPC 162	TP132MS4	-	6200

4.3 IPCM GEARED MOTORS (50Hz)

5,50 kW

n2 [rpm]	M2 [Nm]	fs	i	Gear reducer	Motor Size	Motor Pole	Fr2 [N]
291,2	182	1,5	5,21	IPC 162	TP132MS4	-	6250
233,8	227	1,4	6,49	IPC 162	TP132MS4	-	6350
161,2	328	1,0	9,41	IPC 162	TP132MS4	-	6100
141,3	375	0,9	10,74	IPC 162	TP132MS4	-	5500
113,6	466	0,7	13,36	IPC 162	TP132MS4	-	4300

7,50 kW

n2 [rpm]	M2 [Nm]	fs	i	Gear reducer	Motor Size	Motor Pole	Fr2 [N]
678,8	106	1,4	2,22	IPC 162	TP132M4	-	5500
525,1	137	1,4	2,87	IPC 162	TP132M4	-	5650
396,6	181	1,4	3,80	IPC 162	TP132M4	-	5800
329,7	218	1,2	4,57	IPC 162	TP132M4	-	5850
289,2	248	1,1	5,21	IPC 162	TP132M4	-	5900
232,2	309	1,0	6,49	IPC 162	TP132M4	-	5900
160,1	448	0,7	9,41	IPC 162	TP132M4	-	2500

4.4 IP GEAR REDUCER - 1400 rpm

IP 84

Mn_2 [Nm]	i	Pn_1 [kW]	n2 [rpm]	Fr1 [N]	Fr2 [N]
15	2,14	1,10	672,9	360	940
19	2,75	1,10	523,6	360	930
21	3,58	0,90	402,2	500	1020
21	4,53	0,72	317,9	530	1090
21	5,49	0,60	262,3	550	1150
24	6,83	0,55	210,8	560	1190
27	8,77	0,48	164,2	570	1250
27	11,41	0,37	126,2	180	1020
31	14,63	0,33	98,4	310	1130
34	19,08	0,28	75,5	460	1330
35	24,11	0,23	59,7	520	1540
35	29,27	0,19	49,2	540	1650
37	36,36	0,16	39,6	555	1780
39	46,73	0,13	30,8	570	1930

IP 102

Mn_2 [Nm]	i	Pn_1 [kW]	n2 [rpm]	Fr1 [N]	Fr2 [N]
31	2,34	2,10	615,4	610	1820
39	2,93	2,10	491,5	610	1860
52	3,91	2,10	368,3	610	1900
58	5,73	1,60	251,3	830	2050
57	6,92	1,30	208,1	870	2180
62	8,86	1,10	162,5	810	2240
66	10,52	0,98	136,9	840	2330
67	12,71	0,83	113,3	870	2450
71	16,98	0,66	84,8	910	2650
89	29,21	0,48	49,3	810	2950
92	35,28	0,41	40,8	845	3150
84	47,13	0,28	30,6	910	3550

IP 128

Mn_2 [Nm]	i	Pn_1 [kW]	n2 [rpm]	Fr1 [N]	Fr2 [N]
51	2,21	3,60	651,6	860	2550
64	2,77	3,60	519,9	860	2600
84	3,66	3,60	393,4	860	2600
93	4,57	3,20	315,1	1050	2200
95	5,55	2,70	259,5	1100	2850
97	6,91	2,20	208,4	1150	3000
114	9,44	1,90	152,5	1070	3100

4.4 IP GEAR REDUCER - 1400 rpm

IP 128

Mn_2 [Nm]	i	Pn_1 [kW]	n2 [rpm]	Fr1 [N]	Fr2 [N]
124	11,47	1,70	125,5	1100	3200
132	13,77	1,50	104,6	850	2550
174	18,23	1,50	79,0	850	2800
159	22,72	1,10	63,4	860	3350
155	27,61	0,88	52,2	1090	3850
164	34,37	0,75	41,9	1130	4250
158	47,56	0,52	30,3	1200	4800

IP 142

Mn_2 [Nm]	i	Pn_1 [kW]	n2 [rpm]	Fr1 [N]	Fr2 [N]
55	2,17	4,00	663,6	2060	3400
71	2,80	4,00	514,3	2060	3500
94	3,68	4,00	391,3	2060	3550
121	4,74	4,00	303,8	2060	3600
125	5,61	3,50	256,7	2100	3700
152	7,21	3,30	199,7	2120	3800
190	9,97	3,00	144,4	1980	3300
188	11,79	2,50	122,1	2050	3900
212	15,16	2,20	95,0	2090	4000
248	18,57	2,10	77,5	1370	2100
274	23,90	1,80	60,3	1880	2600
288	28,26	1,60	51,0	2000	3600
278	36,34	1,20	39,6	2050	4700
253	45,23	0,88	31,8	2140	5800

5.1 SALES CONDITIONS

ATTENTION!

The revised data and information, shown in this technical catalogue, replaces the data of the previous editions. Old data is now obsolete. All technical data, dimensions, weights in this catalogue are subject to changes without warning. Illustrations are not binding. You can find the above mentioned data and information on our site www.motovario.com; please periodically consult the technical documentation on the web site to be always updated about possible modifications of performances and characteristics of the product.

All supplies effected by MOTOVARIO are governed exclusively by the general terms of sale that you can find on our website:

http://www.motovario.com/eng/corporate/sales-conditions

NOTES

NOTES

I / IEC / STD / EN / PUJOL / REV.0 / 2024

MOTOVARIO S.A.U. - C/ Costa del Pla, 3 - P.I. Pla del Camí
08297 Castellgalí (Barcelona) - Spain - Tel. +34 93 8789055
www.pujol.com

MOTOVARIO®
HEART OF MOTION
a TECO Group company