M SERIES

LVED
Low voltage European Design
IE3 from 0,37 to 400 kW

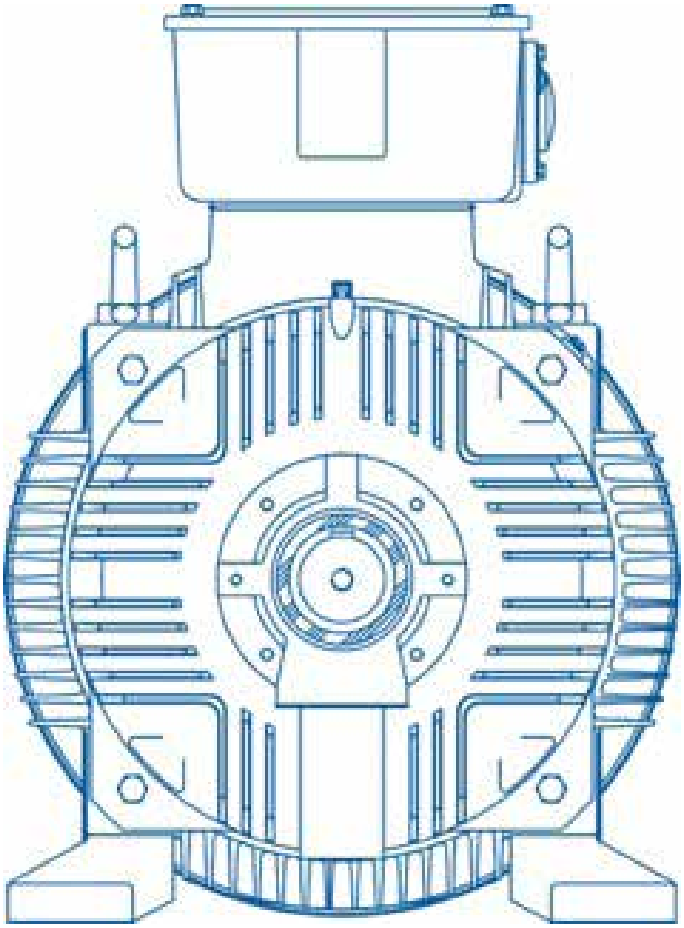

TECO

distributed by

MOTOVARIO®
HEART OF MOTION
a TECO Group company

AESV3E
AESU3E

We do not just manufacture motors. We care about our customers

TECO's unique design and versatile engineering team are committed to shaping the future of electric motors. From improving motor efficiency to offering lower cost of ownership throughout motor lifetime and reduced environmental impact.

Quality with Real Economy

Content

FEATURES 4

SPECIFICATION 6

PERFORMANCE DATA - 50HZ 8

PERFORMANCE DATA - 60Hz 12

PERFORMANCE DATA - 60Hz NEMA Premium 16

DIMENSIONS 20

RADIAL BEARING LOAD 34

STANDARDS & REGULATIONS 36

Features

TECO IE3 Cast Iron squirrel cage induction motors are designed, manufactured and tested to meet the latest European and International Standards. The high quality and reliable construction, are ideally suitable for all industrial markets.

ELECTRICAL SUPPLY & RATINGS

All motors work with both Delta or Star configurations

≦2.2	220/240 △ 50
	250/280 △ 60
	380/415 Y 50
	440/480 Y 60
3.0≦	380/415 △ 50
	440/480 △ 60
	660/690 Y 50

ENCLOSURE

The standard protection is IP55. Optional upgrade to IP56, IP65 and IP66

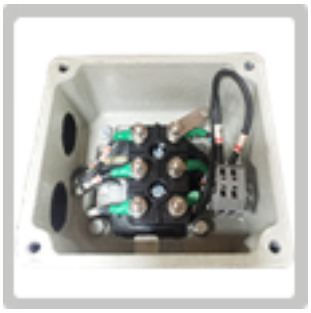

PERFORMANCE

All standard motors are designed to meet IEC 60034 design N performance requirements.

PROTECTION

PTC 150° Thermistors' fitted as standard. PTC Terminal block equivalent to WAGO design

BEARING AND LUBRICATION SYSTEM

Standard motors are fitted with high quality ball bearings sourced direct from leading manufacturers such as SKF, NSK, FAG and NTN.

OIL SEALS

Double lip oil seal used on DE and NDE of the motor

PAINT FINISH

Motors finished in corrosion proof RAL7032 pebble grey. 3 layer paint system offering C3 corrosion protection. Total thickness 100um DFT from Frame 160.

TERMINAL BOX

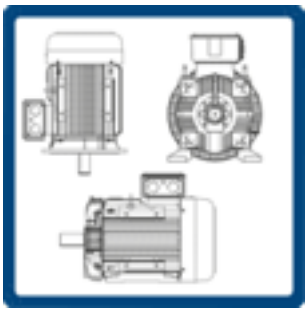

Oversized terminal boxes for easy access to cable termination as standard. Terminal boxes are rotatable 4 x 90° increments. IP55 terminal box as standard.
Central core making the motor a true multi mount design allowing terminal box to be positioned in 6 separate locations, offering complete user adaptability.

CABLE ENTRY

Frame size 160 and above are equipped with a detachable steel gland plate on one side of the terminal box to allow for easy cable termination.

MOTOR CASTING DESIGN

NDF
The feet are an integral part of the casting. Non Detachable Feet (NDF)

SDF
As standard B3, B34 & B35 motors with SDF design (standard detachable feet) are manufactured with a top mounted terminal box. The feet are detachable if required but they only have one fixing position.

ADF
As standard B3, B34 & B35 motors with ADF design (advanced detachable feet) are manufactured with a top mounted terminal box. The feet are detachable if required but in addition to the SDF design the housing is machined in 3 different positions allowing rotation of the terminal box to left or right hand side.

INVERTER RATED

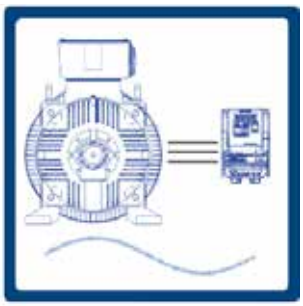

Inverter rated windings allowing standard motors to be used with inverters. Insulated bearings are recommended for motors for 280 frame and above.

OPTIONAL MODIFICATIONS

Bearing/Winding RTD's, additional PTC Thermistors, Encoder, Canopy, Force Vent Cooling, Roller/ Insulated Bearings, Brakes and EX modifications available from stock.

Specification

ITEM		STANDARD SPECIFICATION
Rating	Type of Motors	Squirrel - Cage Induction Motor (SCIM)
	Design Standards	IEC 60034, IEC 60072
	Voltages	230V, 400V, 690V, 265V, 460V
	Frequency	50Hz Or 60Hz
	Output Range	0.37kW ~ 400kW (50Hz) or 0.43kW ~ 460kW (60Hz)
	R.P.M. (Syn.)	3000 ~ 750 R.P.M. (2 ~ 8 Poles) or 3600 ~ 900 R.P.M. (2 ~ 8 Pole)
	Time Duty	Continuous S1, S.F.:1.0
	Frame Nos.	80M ~ 355
	Protection Enclosure	Totally Enclosed (IP55)
	Cooling Method	Self External Fan, Surface Cooling. Totally enclosed fan cooled (IC411)
	Mounting	Foot Mounted (B3), Flange Mounted B5 or B14) and derivatives
Application	Environment Conditions	Site Location : Shadow, Non-Hazardous, Ambient Temperature:-20OC ~ 40OC Relative Humidity:Less Than 90%RH (Non-Condensation), Altitude:Less Than 1000M
	Power Source Conditions	Voltage:±10%, Frequency:±5%, and 10% Max. of Combined Voltage and Frequency But Frequency Variation Does Not Exceed ±5%.
	Method of Starting	Full Voltage Direct On Line or Star/Delta Starting and also soft starter
	Drive Method	Direct Coupled or Belt drive are available for complete range, belt driven application subject to radial bearing load.
	Direction of Rotation	Clockwise when viewing from Drive End as per IEC definition. Suitable for bi-directional operation
Construction	Dimensions	All tolerances are according to IEC 60034-1. See dimensional diagram
	Frame	High Grade Cast Iron
	End Bracket	High Grade Cast Iron
	External Fan	Conductive Polypropylene (Non-Sparking Material)
	Fan Cover	Pressed Plate
	Shaft	Carbon Steel Cylindrical single extension with Keyway, balanced with half key. Both DE & NDE and drilled and tapped with RH thread.
	Bearing	Located DE Bearings. F80-160 fitted with pre-lubricated shielded ball bearings. F180-355 fitted with open ball bearings as standard.
	Lubrication	Mineral Oil, Li - Base Grease (MULTEMP SRL) for Frame 80M~160L. ESSO UNIREX N3 for Frame 180M~315D
	Lead Terminal	Solderless Lug Terminals
	Shaft Seal	R23 Double lip oil seal both ends
	Terminal Box	Cast Iron construction, Terminal Box can be rotated through 90° increments.
	Iron Core	High Grade, Insulated, Cold - Rolled Electro-Magnetic Steel Plate.
	Core Pack	Pre-Formed Random Wound made of heavy polyester enameled copper wire with built in thermistor (150OC PTC). One per Phase
	Stator Insulation	Class F Insulation System
	Varnish Treatment	Phenolic Alkyd Resin Varnish.
	Rotor Winding	Squirrel Cage, Aluminium Conductor with End-Ring and Wafter Blades Integrally Cast
	Painting	Phenolic rust proof base plus lacquer surface finished painting in Pebble-Grey Colour (Munsell 5Y 7.5/1) (RAL7032).
	Nameplate	Stainless Steel Plate.
	Bolt Thread	ISO Metric System (Strength Category 8.8T).
	Grounding Terminal	Two Terminals, one located inside the terminal box and another located on the frame of the motor.
Performance	Test Procedure	IEC 60034-2-1:2007 and Full Voltage Measuring Starting Performance
	Temperature Rise	Not to exceed 80OC rise by Resistance Method at S.F 1.0 operation
	Over Speed	120% Syn. R.P.M. for 2 Minutes
	Over Torque	160% Rated Torque for 15 Sec

CERTIFICATE

• CE Comformity

• UL Certification for US and Canada

• Russain CU-TR

• NEMA Premium

• Available for modification as IEC Ex and ATEX Zone2 / Zone21 / Zone22

QUALITY ASSURANCE

Quality is controlled by extensive in process checking during manufacture. The following tests are carried out:

• Type test (for a certain Batch of motors)

• Routine test (carried out on each individual motor).

Performance data - 50Hz, 400V

2 Pole

OUTPUT kW	FULL LOAD rpm	FRAME NO.	EFFICIENCY			POWER FACTOR	CURRENT		TORQUE				ROTOR J kg-m2	APPROX. WEIGHT kg
			FULL LOAD (%)	3/4 LOAD (%)	2/4 LOAD (%)	FULL LOAD	FULL LOAD (A)	LOCKED ROTOR (R)	FULL LOAD N•m	LOCKED ROTOR %FLT	PULL UP %FLT	BREAK DOWN %FLT		
0,75	2875	80M	80,7	78,3	75,1	84,5	1,59	12	2,491	280	275	335	0,001	17,5
1,1	2870	80M	82,7	83,0	81,3	85,0	2,26	18	3,660	300	295	350	0,002	19,5
1,5	2850	90S	84,2	85,4	85,8	90,5	2,84	22	5,026	220	210	300	0,003	25,0
2,2	2860	90L	85,9	86,7	86,8	89,5	4,13	35	7,346	245	235	315	0,004	28,0
3	2855	100L	87,1	88,3	88,4	90,0	5,52	48	10,04	325	310	355	0,006	38,0
4	2875	112M	88,1	89,0	88,9	91,0	7,20	69	13,29	270	250	360	0,011	50,0
5,5	2930	132S	89,2	89,8	89,5	88,5	10,1	80	17,93	210	205	340	0,019	70,5
7,5	2920	132S	90,1	90,9	90,8	87,0	13,8	100	24,53	210	195	315	0,020	75,0
11	2935	160M	91,5	92,5	92,5	90,0	19,3	150	35,79	230	185	300	0,046	110
15	2935	160M	91,9	92,0	92,0	89,0	26,5	230	48,81	275	230	330	0,051	120
18,5	2930	160L	92,4	93,0	93,0	90,0	32,1	260	60,30	245	200	300	0,059	137
22	2940	180M	93,0	93,0	93,0	87,0	39,2	300	71,46	225	180	300	0,071	178
30	2950	200L	93,3	93,5	92,5	90,0	51,6	400	97,12	200	145	300	0,151	276
37	2955	200L	94,0	95,0	94,5	91,0	62,4	510	119,6	210	145	300	0,188	302
45	2960	225M	94,0	94,0	93,5	91,0	75,9	615	145,2	170	140	300	0,30	333
55	2970	250M	95,0	95,0	95,0	91,5	91,3	735	176,9	165	130	315	0,39	456
75	2965	280S	94,7	94,5	93,5	90,5	126	1000	241,6	220	190	280	0,60	585
90	2970	280M	95,0	94,8	94,1	90,5	151	1250	289,4	220	190	280	0,70	640
110	2970	315S	95,2	95,0	94,0	90,0	185	1515	353,7	220	190	250	1,00	870
132	2970	315M	95,4	95,2	94,4	90,5	221	1670	424,4	220	190	250	1,20	940
160	2975	315M	95,6	95,5	94,8	91,0	265	2140	513,6	230	200	250	1,30	980
200	2975	315L	95,8	95,6	95,0	91,0	331	2550	642,0	230	200	250	1,50	1.150
250	2975	315D	95,8	95,8	94,8	91,0	414	3050	802,5	210	180	250	2,40	1.600
315	2975	315D	95,8	95,5	94,7	91,0	522	3800	1011	210	180	250	2,6	1.750
355	2978	355C	95,8	95,5	94,7	91,5	585	4635	1138	130	110	230	5,0	2.470
375	2978	355C	95,8	95,6	94,8	91,5	617	5000	1203	130	110	230	5,2	2.500
400	2978	355C	95,8	95,6	94,8	91,6	658	5280	1283	130	110	230	5,6	2.550

Note:

1.The above are typical values based on tests according to IEC 60034-2-1
2.Tolerance according to IEC 60034-1
3.Efficiency, power factor, speed and torque are the same for other voltages. Current values vary inversely with voltage
4.(*) Efficiency per TECO performance standard (Not IE3)

IE3 CI, TEFC, CLASS F, 40°C AMBIENT TEMP. IEC, CONTINUOS DUTY 50HZ 400V

4 Pole

OUTPUT kW	FULL LOAD rpm	FRAME NO.	EFFICIENCY			POWER FACTOR	CURRENT		TORQUE				ROTOR J kg-m2	APPROX. WEIGHT kg
			FULL LOAD (%)	3/4 LOAD (%)	2/4 LOAD (%)	FULL LOAD	FULL LOAD (A)	LOCKED ROTOR (R)	FULL LOAD N•m	LOCKED ROTOR %FLT	PULL UP %FLT	BREAK DOWN %FLT		
0,55	1430	80M	79,0(*)	77,9	74,7	69,0	1,46	9	3,673	300	270	320	0,002	17,5
0,75	1410	80M	82,5	81,8	79,7	73,5	1,79	11	5,080	315	290	335	0,003	20,5
1,1	1430	90S	84,1	84,4	83,2	79,5	2,37	17	7,346	255	205	300	0,005	26,0
1,5	1435	90L	85,3	84,1	82,2	75,0	3,38	26	9,983	300	235	335	0,006	28,0
2,2	1450	100L	86,7	87,3	86,9	81,0	4,52	33	14,49	210	160	300	0,011	38,0
3	1455	100L	87,7	87,7	86,2	78,0	6,33	49	19,69	250	240	335	0,013	40,5
4	1445	112M	88,6	88,4	87,9	82,0	7,95	57	26,44	245	205	300	0,021	54,0
5,5	1455	132S	89,6	90,4	90,3	85,5	10,4	77	36,10	240	200	300	0,033	74,5
7,5	1460	132M	90,4	90,9	90,6	84,5	14,2	110	49,06	270	225	330	0,043	85,0
11	1460	160M	91,4	92,0	91,5	84,0	20,7	160	71,95	230	185	300	0,091	133
15	1460	160L	92,1	92,5	92,5	84,5	27,8	225	98,12	250	195	300	0,115	138
18,5	1475	180M	92,6	94,0	93,0	81,5	35,4	270	119,8	215	160	280	0,176	183
22	1475	180L	93,0	93,5	93,0	81,0	42,2	315	142,4	210	145	275	0,197	199
30	1470	200L	94,1	95,0	95,0	86,0	53,5	445	194,9	250	205	300	0,363	266
37	1480	225S	94,1	95,0	94,5	85,5	66,4	505	238,8	210	175	300	0,474	333
45	1480	225M	94,5	95,0	94,5	84,5	81,3	600	290,4	210	175	300	0,495	368
55	1485	250M	95,0	95,0	94,5	87,5	95,5	750	353,7	210	185	295	0,978	492
75	1485	280S	95,0	95,0	94,5	88,5	129	1000	482,3	220	190	280	1,500	660
90	1485	280M	95,2	95,2	94,5	88,5	154	1200	578,8	220	190	280	1,700	700
110	1480	315S	95,4	95,4	94,8	88,5	188	1595	709,8	220	190	260	2,200	930
132	1485	315M	95,6	95,6	95,2	89,0	224	1815	848,9	220	190	260	2,60	1.040
160	1485	315M	95,8	95,8	95,5	89,0	271	2225	1029	230	200	260	2,90	1.080
200	1485	315L	96,0	96,0	95,6	89,5	336	2630	1286	230	200	260	3,50	1.250
250	1485	315D	96,0	95,8	95,2	87,0	432	3300	1608	200	170	250	6,90	1.800
315	1488	315D	96,0	96,0	95,5	87,0	544	4050	2022	200	170	260	7,80	2.000
355	1488	355C	96,0	96,0	95,5	89,5	596	4280	2278	200	170	280	9,50	2.500
375	1488	355C	96,0	96,0	95,5	89,5	630	4450	2407	200	170	280	10,00	2.550
400	1488	355C	96,0	96,0	95,5	89,6	671	4975	2567	210	180	280	10,70	2.630

Note
1. The above are typical values based on test according to IEC 60034-2-1.
2. Tolerance according to IEC 60034-1.
3. Efficiency, power factor, speed and torque are the same for other voltages Current values vary inversely with voltage.
4. (*) Efficiency, per TECO performance standard (Not IE3).

Performance data - 50Hz, 400V

6 Pole

OUTPUT kW	FULL LOAD rpm	FRAME NO.	EFFICIENCY			POWER FACTOR	CURRENT		TORQUE				ROTOR J kg-m2	APPROX. WEIGHT kg
			FULL LOAD (%)	3/4 LOAD (%)	2/4 LOAD (%)	FULL LOAD	FULL LOAD (A)	LOCKED ROTOR (R)	FULL LOAD N•m	LOCKED ROTOR %FLT	PULL UP %FLT	BREAK DOWN %FLT		
0,37	920	80M	70,0(*)	69,0	64,8	65,0	1,17	5	3,841	230	210	250	0,002	18,0
0,55	905	80M	70,0(*)	69,7	66,2	69,0	1,64	6	5,804	210	195	250	0,003	19,5
0,75	935	90S	78,9	80,6	79,4	71,0	1,93	9	7,660	210	190	250	0,005	27,5
1,1	930	90L	81,0	81,2	80,5	72,0	2,72	13	11,30	210	185	240	0,007	30,0
1,5	950	100L	82,5	82,9	81,5	72,5	3,62	18	15,08	210	175	250	0,015	41,0
2,2	960	112M	84,3	84,3	82,2	67,0	5,62	29	21,89	190	180	280	0,021	52,5
3	970	132S	85,6	86,1	85,1	79,5	6,36	41	29,54	195	170	300	0,038	74,0
4	970	132M	86,8	87,2	86,3	79,5	8,37	57	39,38	200	185	310	0,051	84,0
5,5	970	132M	88,0	88,0	86,2	73,5	12,3	88	54,15	210	205	345	0,054	87,0
7,5	970	160M	90,0	91,0	90,0	79,0	15,2	110	73,84	235	210	300	0,121	110
11	970	160L	90,3	91,0	90,5	78,0	22,5	170	108,3	295	255	300	0,157	138
15	970	180L	91,2	92,0	92,0	82,0	29,0	200	147,7	215	165	255	0,334	205
18,5	975	200L	92,0	93,0	93,0	80,5	36,1	260	181,2	220	185	265	0,457	263
22	975	200L	92,2	93,0	93,5	81,5	42,3	305	215,5	210	185	265	0,520	283
30	980	225M	93,0	94,0	94,0	83,5	55,8	335	292,3	210	160	240	0,756	343
37	980	250M	93,3	94,0	94,0	85,0	67,3	490	360,6	230	200	280	1,048	458
45	982	280S	93,7	93,7	93,0	85,5	81,1	570	437,6	220	190	280	1,800	600
55	980	280M	94,1	94,1	93,5	85,5	98,7	720	536,0	220	190	280	2,100	660
75	985	315S	94,6	94,6	94,0	85,0	135	910	727,2	220	190	250	3,20	850
90	985	315M	94,9	94,9	94,6	85,5	160	1200	872,6	230	200	260	3,80	1.000
110	985	315M	95,1	95,2	94,7	85,5	195	1500	1066	230	200	250	4,60	1.120
132	988	315L	95,4	95,5	95,2	85,0	235	1700	1276	230	200	250	5,10	1.200
160	988	315L	95,6	95,6	95,2	85,0	284	2000	1547	230	200	250	5,80	1.320
200	988	315D	95,8	95,8	95,5	85,0	355	2500	1933	210	180	240	9,80	1.750
250	988	315D	95,8	95,8	95,5	85,0	443	3100	2416	200	170	240	11,60	2.100
315	990	355C	95,8	95,8	95,5	84,5	562	4175	3039	200	170	280	15,70	2.700
355	990	355C	95,8	95,8	95,5	84,5	633	4425	3424	200	170	280	16,20	2.740
375	990	355C	95,8	95,8	95,5	84,5	669	4630	3617	200	170	280	16,90	2.800

Note:

1. The above are typical values based on tests according to IEC 60034-2-1
2. Tolerance according to IEC 60034-1
3. Efficiency, power factor, speed and torque are the same for other voltages. Current values vary inversely with voltage
4. (*) Efficiency per TECO performance standard (Not IE3)

IE3 CI, TEFC, CLASS F, 40°C AMBIENT TEMP. IEC, CONTINUOS DUTY 50HZ 400V

8 Pole

OUTPUT kW	FULL LOAD rpm	FRAME NO.	EFFICIENCY			POWER FACTOR	CURRENT		TORQUE				ROTOR J kg-m2	APPROX. WEIGHT kg
			FULL LOAD (%)	3/4 LOAD (%)	2/4 LOAD (%)	FULL LOAD	FULL LOAD (A)	LOCKED ROTOR (R)	FULL LOAD N•m	LOCKED ROTOR %FLT	PULL UP %FLT	BREAK DOWN %FLT		
0,18	705	80M	58,7	53,9	46,2	51.5	0,86	3	2,438	300	275	305	0,003	20,0
0,25	690	80M	64,1	62,0	56,5	63,8	0,88	3	3,460	225	210	230	0,004	21,0
0,37	705	90S	69,3	66,6	62,3	59.0	1,31	5	5,012	195	175	235	0,004	25,0
0,55	705	90L	73,0	71,5	68,9	63.5	1,71	7	7,450	170	150	220	0,006	29,0
0,75	700	100L	75,0	74,7	70,9	60.5	2,39	10	10,23	225	215	235	0,010	36,0
1,1	695	100L	77,7	78,8	76,8	66.0	3,10	13	15,12	200	190	210	0,015	44,5
1,5	700	112M	79,7	80,2	79,1	69.5	3,91	18	20,46	165	140	205	0,022	55,5
2,2	705	132S	81,9	82,2	79,8	69,0	5,62	31	29,80	230	205	265	0,034	66,0
3	715	132M	83,5	83,2	80,1	63.0	8,23	47	40,07	280	250	325	0,045	75,0
4	720	160M	84,8	84,7	82,5	70,5	9,66	57	53,06	190	170	250	0,086	111
5,5	720	160M	86,2	85,2	83,3	71,5	12,9	78	72,95	200	185	275	0,126	130
7,5	720	160L	87,3	87,3	85,8	71,0	17,5	104	99,48	225	215	295	0,168	155
11	720	180L	88,6	88,6	88,1	78.0	23,0	130	145,9	170	150	210	0,318	203
15	730	200L	89,6	88,9	87,5	78,0	31,0	187	196,2	195	170	230	0,520	299
18,5	735	225S	91,5	92,0	91,0	72,0	40,5	220	240,4	210	185	235	0,669	345
22	735	225M	92,0	92,0	92,0	74,5	46,3	240	285,9	210	170	215	0,756	367
30	735	250M	92,0	92,0	92,0	74,5	63,2	350	389,8	210	170	245	1,141	475
37	736	280S	92,2	92,3	91,5	81,0	71,5	455	480,1	150	130	270	2,100	645
45	736	280M	92,6	92,6	92,1	81,0	86,6	540	583,9	150	130	270	2,400	690
55	738	315S	93,0	93,0	92,3	79,0	108	660	711,7	200	180	250	4,00	900
75	738	315M	93,7	93,8	93,5	79,0	146	885	970,5	200	180	250	5,30	1.060
90	740	315L	94,0	94,0	93,6	80,0	173	1160	1161	200	180	250	6,10	1.180
110	740	315L	94,5	94,5	94,1	80,0	210	1300	1420	200	180	260	7,70	1.320
132	741	315D	94,6	94,6	94,1	80,2	251	1606	1701	140	120	270	8,70	1.650
160	741	315D	94,8	94,8	94,2	80,0	305	2035	2062	140	120	275	10,20	1.800
200	741	315D	95,0	95,0	94,3	80,5	377	2445	2578	140	120	270	11,80	1.950
250	741	355C	95,0	95,0	94,5	84,0	452	3000	3222	130	130	270	17,50	2.650
315	741	355C	95,2	95,2	94,6	84,0	569	3870	4060	130	130	270	20,90	2.800

Note
1. The above are typical values based on tests according to IEC 60034-2-1
2. Tolerance according to IEC 60034-1
3. Efficiency, power factor, speed and torque are the same for other voltages. Current values vary inversely with voltage
4. (*) Efficiency per TECO performance standard (Not IE3)

Performance data – 60Hz, 460V, S.F=1,15

2 Pole

OUTPUT kW	FULL LOAD rpm	FRAME NO.	EFFICIENCY			POWER FACTOR	CURRENT		TORQUE				ROTOR J kg-m2	APPROX. WEIGHT kg
			FULL LOAD (%)	3/4 LOAD (%)	2/4 LOAD (%)	FULL LOAD	FULL LOAD (A)	LOCKED ROTOR (R)	FULL LOAD N•m	LOCKED ROTOR %FLT	PULL UP %FLT	BREAK DOWN %FLT		
0,86	3480	80M	81,6 (*)	80,5	76,7	84,0	1,57	14	2,360	295	285	370	0,001	17,5
1,27	3470	80M	84,0	83,9	81,6	85,5	2,22	19	3,495	320	310	365	0,002	19,5
1,73	3455	90S	85,5	86,7	86,5	90,0	2,82	23	4,782	295	210	300	0,003	25,0
2,53	3460	90L	86,5	87,4	87,0	89,5	4,10	38	6,983	320	235	315	0,004	28,0
3,45	3450	100L	88,5	89,4	89,2	90,0	5,44	47	9,550	295	285	335	0,006	38,0
4,6	3470	112M	89,5	90,2	89,9	91,5	7,05	68	12,66	255	250	325	0,011	50,0
6,33	3530	132S	89,5	89,7	88,9	87,5	10,1	79	17,13	210	205	300	0,019	70,5
8,6	3520	132S	90,2	90,7	90,2	87,5	13,7	100	23,33	210	200	300	0,020	75,0
12,7	3525	160M	91,0	91,0	90,1	92,0	19,0	155	34,41	215	190	300	0,046	110
17,3	3535	160M	91,7	92,0	91,5	91,0	26,0	225	46,74	305	255	340	0,051	120
21,3	3525	160L	91,7	92,4	92,3	93,0	31,3	265	57,71	255	210	300	0,059	137
25,3	3540	180M	91,7	92,0	91,3	90,5	38,3	311	68,25	250	200	300	0,071	178
34,5	3545	200L	93,0	92,9	92,0	91,0	51,2	400	92,94	200	160	220	0,151	276
42,6	3550	200L	93,6	93,8	93,6	91,0	62,8	510	114,6	205	150	255	0,188	302
52	3560	225M	93,6	93,6	92,8	93,0	75,0	620	139,5	180	175	300	0,297	333
63	3565	250M	93,6	93,9	93,3	92,5	91,3	740	168,8	210	160	300	0,386	456
86	3570	280S	94,5(*)	94,5	93,8	91,0	126	1000	230,1	220	190	270	0,600	585
104	3570	280M	95,0	94,8	94,2	91,0	151	1250	278,2	220	190	280	0,700	640
127	3575	315S	95,0	94,5	93,0	90,0	186	1475	339,3	220	190	250	1,000	870
152	3575	315M	95,1(*)	94,8	93,6	90,5	222	1650	406,0	220	190	250	1,200	940
184	3577	315M	95,8	95,4	94,4	92,0	262	2100	491,2	230	200	250	1,300	980
230	3575	315L	95,8	95,6	94,5	92,0	328	2500	614,4	230	200	250	1,500	1.150
288	3575	315D	95,8	95,5	94,4	91,5	412	3050	769,3	210	180	250	2,400	1.600
362	3575	315D	96,0	95,8	94,6	91,5	517	3750	967,0	210	180	250	2,60	1.750
408	3577	355C	96,0	95,8	94,8	91,5	583	4470	1089	110	100	220	5,00	2.470
431	3577	355C	96,0	95,8	94,8	91,5	616	4820	1151	110	100	220	5,20	2.500
460	3577	355C	96,0	95,8	94,8	91,5	657	5100	1228	110	100	220	5,60	2.550

Note:

1. The above are typical values based on tests according to IEC 60034-2-1
2. Tolerance according to IEC 60034-1
3. Efficiency, power factor, speed and torque are the same for other voltages. Current values vary inversely with voltage
4. (*) Efficiency per TECO performance standard (Not IE3)

IE3 CI, TEFC, CLASS F, 40°C AMBIENT TEMP. IEC, CONTINUOS DUTY 60HZ 460V

4 Pole

OUTPUT kW	FULL LOAD rpm	FRAME NO.	EFFICIENCY			POWER FACTOR	CURRENT		TORQUE				ROTOR J kg-m2	APPROX. WEIGHT kg
			FULL LOAD (%)	3/4 LOAD (%)	2/4 LOAD (%)	FULL LOAD	FULL LOAD (A)	LOCKED ROTOR (R)	FULL LOAD N•m	LOCKED ROTOR %FLT	PULL UP %FLT	BREAK DOWN %FLT		
0,63	1725	80M	80,0	78,8	74,3	70,0	1,41	9	3,488	325	295	355	0,002	17,5
0,86	1710	80M	84,0 (*)	83,6	81,4	74,0	1,74	12	4,803	370	340	355	0,003	20,5
1,27	1730	90S	85,5 (*)	86,1	84,6	78,0	2,39	17	7,011	250	195	300	0,005	26,0
1,73	1735	90L	85,5 (*)	85,7	83,9	75,5	3,36	25	9,522	280	220	330	0,006	28,0
2,53	1760	100L	88,5 (*)	88,1	86,9	74,5	4,82	41	13,73	245	195	350	0,011	38,0
3,45	1750	100L	88,5 (*)	88,5	87,1	79,5	6,15	50	18,83	225	220	340	0,013	40,5
4,6	1740	112M	88,5 (*)	89,2	88,8	82,0	7,96	57	25,25	220	175	300	0,021	54,0
6,33	1755	132S	91,7	92,1	91,9	85,5	10,1	78	34,45	255	205	330	0,033	74,5
8,6	1760	132M	91,7	92,2	91,9	85,5	13,8	113	46,66	285	235	350	0,043	85,0
12,7	1760	160M	92,4	93,0	92,9	87,0	19,8	165	68,91	255	240	355	0,091	133
17,3	1755	160L	93,0 (*)	93,5	93,4	87,0	26,8	225	94,14	285	280	385	0,115	138
21,3	1770	180M	93,6	94,0	93,5	82,5	34,6	265	114,9	230	225	355	0,176	183
25,3	1770	180L	93,6	94,0	93,5	82,0	41,4	310	136,5	235	230	355	0,197	199
34,5	1770	200L	94,1	94,5	94,3	89,0	51,7	410	186,1	210	195	300	0,363	266
42,6	1780	225S	94,5 (*)	94,7	94,1	86,0	65,8	510	228,6	210	190	310	0,474	333
52	1775	225M	94,5 (*)	94,5	94,1	86,0	80,3	620	279,8	235	200	295	0,495	368
63	1780	250M	95,0 (*)	95,0	94,2	88,0	94,6	755	338,0	240	205	300	0,978	492
86	1780	280S	95,0 (*)	95,0	94,2	89,0	128	1000	461,4	220	190	270	1,500	660
104	1780	280M	95,4 (*)	95,4	94,5	89,5	153	1200	558,0	220	190	280	1,700	700
127	1785	315S	95,6 (*)	95,5	94,7	89,5	186	1565	679,5	220	190	260	2,200	930
152	1785	315M	95,8 (*)	95,6	95,0	89,5	223	1800	813,2	220	190	260	2,60	1.040
184	1785	315M	95,8 (*)	95,6	95,0	89,5	269	2200	984,4	230	200	260	2,90	1.080
230	1785	315L	95,8 (*)	95,8	95,5	90,0	335	2600	1231	230	200	250	3,50	1.250
288	1788	315D	96,0 (*)	95,8	95,0	88,0	428	3240	1538	200	170	250	6,90	1.800
362	1788	315D	96,2	96,2	95,6	88,0	537	3980	1934	200	170	250	7,80	2.000
408	1788	355C	96,2	96,1	95,5	90,0	591	4240	2179	200	170	270	9,50	2.500
431	1788	355C	96,2	96,1	95,5	90,0	625	4390	2302	200	170	260	10,00	2.550
460	1788	355C	96,2	96,2	95,6	90,0	667	4940	2457	205	175	280	10,70	2.630

Note
1. The above are typical values based on tests according to IEC 60034-2-1
2. Tolerance according to IEC 60034-1
3. Efficiency, power factor, speed and torque are the same for other voltages.Current values vary inversely with voltage
4. (*) Efficiency per TECO performance standard (Not IE3)

Performance data – 60Hz, 460V, S.F=1,15

6 Pole

OUTPUT kW	FULL LOAD rpm	FRAME NO.	EFFICIENCY			POWER FACTOR	CURRENT		TORQUE				ROTOR J kg-m2	APPROX. WEIGHT kg
			FULL LOAD (%)	3/4 LOAD (%)	2/4 LOAD (%)	FULL LOAD	FULL LOAD (A)	LOCKED ROTOR (R)	FULL LOAD N•m	LOCKED ROTOR %FLT	PULL UP %FLT	BREAK DOWN %FLT		
0,43	1120	80M	76,0	76,4	73,1	64,5	1,10	5	3,667	225	220	255	0,010	18,0
0,63	1110	80M	76,0	76,4	73,5	66,5	1,56	7	5,420	210	205	240	0,012	19,5
0,86	1140	90S	82,5 (*)	83,8	82,7	70,5	1,86	10	7,204	195	170	250	0,022	27,5
1,27	1130	90L	82,5	83,3	82,6	72,0	2,68	13	10,73	185	165	235	0,026	30,0
1,73	1150	100L	84,0 (*)	84,2	82,7	73,0	3,54	18	14,37	200	155	240	0,058	41,0
2,53	1155	112M	86,5 (*)	86,5	84,7	67,5	5,44	28	20,92	165	160	270	0,083	52,5
3,45	1165	132S	89,5	89,5	88,1	77,0	6,28	41	28,28	190	165	300	0,154	74,0
4,6	1170	132M	90,2 (*)	90,4	88,9	77,5	8,26	61	37,55	210	170	300	0,205	84,0
6,33	1170	132M	90,2 (*)	90,0	88,6	74,5	11,8	87	51,67	210	185	330	0,216	87,0
8,6	1170	160M	91,0	91,5	91,0	80,0	14,8	110	70,20	235	210	300	0,483	110
12,7	1170	160L	91,7	92,0	91,7	81,0	21,5	171	103,7	245	220	300	0,628	138
17,3	1165	180L	91,7 (*)	92,3	92,6	83,5	28,4	205	141,8	225	200	280	1,337	205
21,3	1175	200L	93,0	93,4	93,3	82,0	35,1	270	173,1	255	195	260	1,829	263
25,3	1175	200L	93,0	93,5	93,5	82,0	41,6	320	205,6	245	190	250	2,078	283
34,5	1175	225M	93,0 (*)	93,7	93,7	87,0	53,5	340	280,4	175	120	210	3,023	343
42,6	1180	250M	94,1 (*)	94,3	94,0	87,5	64,9	500	344,8	220	195	250	4,194	458
52	1185	280S	94,5	94,5	93,5	86,0	80,3	575	419,1	220	190	270	7,200	600
63	1185	280M	94,5	94,5	93,7	86,0	97,3	720	507,7	220	190	270	8,400	660
86	1185	315S	95,0	95,0	94,4	86,0	132	900	693,1	220	190	250	12,80	850
104	1185	315M	95,2 (*)	95,2	94,5	86,0	159	1200	838,1	220	190	250	15,20	1.000
127	1188	315M	95,4 (*)	95,4	95,0	86,5	193	1420	1021	230	200	250	18,40	1.120
152	1188	315L	95,8	95,8	95,3	86,5	230	1650	1222	230	200	250	20,40	1.200
184	1188	315L	95,8	95,9	95,4	86,5	279	2050	1479	230	200	250	23,20	1.320
230	1188	315D	95,8	95,8	95,5	85,5	352	2450	1849	210	180	220	39,20	1.750
288	1188	315D	95,8	95,8	95,4	85,5	441	3100	2315	200	170	220	46,40	2.100
362	1190	355C	95,8	95,8	95,3	85,5	555	4065	2905	200	170	280	62,80	2.700
408	1190	355C	95,8	95,8	95,3	85,6	624	4310	3274	180	160	260	64,80	2.740
431	1190	355C	95,8	95,8	95,3	85,6	660	4505	3459	180	160	260	67,60	2.800

Note:

1.The above are typical values based on tests according to IEC 60034-2-1
2. Tolerance according to IEC 60034-1
3.Efficiency, power factor, speed and torque are the same for other voltages. Current values vary inversely with voltage
4.(*) Efficiency per TECO performance standard (Not IE3)

IE3 CI, TEFC, CLASS F, 40°C AMBIENT TEMP. IEC, CONTINUOS DUTY 60HZ 460V

8 Pole

OUTPUT kW	FULL LOAD rpm	FRAME NO.	EFFICIENCY			POWER FACTOR	CURRENT		TORQUE				ROTOR J kg-m2	APPROX. WEIGHT kg
			FULL LOAD (%)	3/4 LOAD (%)	2/4 LOAD (%)	FULL LOAD	FULL LOAD (A)	LOCKED ROTOR (R)	FULL LOAD N•m	LOCKED ROTOR %FLT	PULL UP %FLT	BREAK DOWN %FLT		
0,21	860	80M	61,5	57,1	48,4	45.0	0,95	4	2,332	320	315	335	0,003	20,0
0,29	840	80M	68,0	65,6	59,3	58.0	0,92	4	3,297	210	205	220	0,004	21,0
0,43	855	90S	72,0	71,3	67,2	62.0	1,21	5	4,803	165	155	220	0,004	25,0
0,63	855	90L	74,0	74,0	71,5	65.0	1,64	7	7,037	155	145	210	0,006	29,0
0,86	855	100L	75,5	75,5	73,6	63.5	2,25	11	9,606	185	170	230	0,010	36,0
1,27	850	100L	78,5(*)	79,5	78,8	68.0	2,99	14	14,27	165	155	210	0,015	44,5
1,73	855	112M	79,6	81,4	81,1	69.0	3,95	20	19,32	150	110	220	0,022	55,5
2,53	855	132S	84,6 (*)	85,3	83,8	65.5	5,73	33	28,26	240	220	290	0,034	66,0
3,45	860	132M	85,7	86,0	84,1	62.0	8,15	50	38,31	275	250	335	0,045	75,0
4,6	870	160M	86,5	86,8	85,8	67.0	9,96	59	50,49	210	195	285	0,086	111
6,33	870	160M	86,5	87,0	86,5	69.5	13,2	75	69,48	200	190	270	0,126	130
8,6	870	160L	89,5	89,9	89,2	69.0	17,5	105	94,40	215	200	280	0,168	155
12,7	870	180L	89,5 (*)	90,9	91,0	82.0	21,7	127	139,4	165	150	200	0,318	203
17,3	870	200L	88,7	90,1	90,6	80.5	30,4	182	189,9	200	180	220	0,520	299
21,3	880	225S	92,0	92,5	92,0	76,5	38,0	196	231,2	200	140	235	0,669	345
25,3	880	225M	92,0	92,5	92,0	78,0	44,3	208	274,6	180	150	250	0,756	367
34,5	885	250M	93,0	93,0	93,0	79,0	58,9	295	372,3	180	130	225	1,141	475
42,6	885	280S	92,8	92,8	92,0	81,5	70,7	455	459,7	125	105	240	2,100	645
52	885	280M	93,6	93,6	92,5	82,0	85,0	550	561,1	120	100	230	2,400	690
63	887	315S	93,6	93,6	92,6	81,5	104	600	678,3	130	110	220	4,00	900
86	886	315M	94,1	94,1	93,0	81,5	141	800	927,0	130	110	220	5,30	1.060
104	886	315L	94,2	94,2	93,2	81,5	170	920	1121	135	115	220	6,10	1.180
127	888	315L	94,5	94,5	93,6	81,5	207	1250	1366	140	120	220	7,70	1.320
152	888	315D	95,0	95,0	94,2	81,5	246	1540	1635	120	100	240	8,70	1.650
184	888	315D	95,0	95,0	94,5	81,5	298	1932	1979	100	80	250	10,20	1.800
230	888	315D	95,1	95,1	94,5	82,0	370	2310	2474	100	80	240	11,80	1.950
288	888	355C	95,1	95,1	94,6	84,5	450	3000	3097	100	100	240	17,50	2.650
362	888	355C	95,2	95,2	94,7	84,7	563	3800	3893	110	110	250	20,90	2.800

Note
1.The above are typical values based on tests according to IEC 60034-2-1
2. Tolerance according to IEC 60034-1
3. Efficiency, power factor, speed and torque are the same for other voltages. Current values vary inversely with voltage
4. (*) Efficiency per TECO performance standard (Not IE3)

Performance data – 60Hz, NEMA Premium

2 Pole

OUTPUT kW	FULL LOAD rpm	FRAME NO.	EFFICIENCY			POWER FACTOR	CURRENT					TORQUE				ROTOR J kg-m2	APPROX. WEIGHT kg
			FULL LOAD (%)	3/4 LOAD (%)	2/4 LOAD (%)	FULL LOAD	FULL LOAD VOLTAGE (A)				LRC (A) 460V	FULL LOAD N•m	LOCKED ROTOR %FLT	PULL UP %FLT	BREAK DOWN %FLT		
							254 - 277 / 440 - 480	265 / 460	460	440 - 480							
0,75	3500	80M	81,6	79,9	75,3	81,0	2,58-2,37 / 1,49-1,36	2,47 / 1,42	-	-	14	2,043	345	330	430	0,001	17,5
1,1	3490	80M	84,0	83,3	80,3	83,0	3,59-3,29 / 2,07-1,90	3,44 / 1,98	-	-	19	3,005	370	355	425	0,002	19,5
1,5	3475	90S	85,5	86,1	85,3	88,5	4,51-4,13 / 2,60-2,38	4,32 / 2,49	-	-	23	4,116	230	220	330	0,003	25,0
2,2	3485	90L	86,5	86,9	86,0	87,5	6,61-6,06 / 3,81-3,50	6,33 / 3,65	-	-	38	6,019	250	240	370	0,004	28,0
3	3480	100L	88,5	88,9	88,2	88,5	-	-	4,81	5,03 - 4,61	47	340	335	390	390	0,006	38,0
4	3500	112M	88,5	88,8	88,1	90,0	-	-	6,30	6,59 - 6,04	68	290	235	365	365	0,011	50,0
5,5	3540	132S	89,5	89,5	88,2	86,5	-	-	8,92	9,3 - 8,55	79	235	235	335	335	0,019	70,5
7,5	3535	132S	90,2	90,3	89,5	86,5	-	-	12,1	12,6 - 11,6	98	220	220	310	310	0,020	75,0
11	3540	160M	91,0	91,0	90,0	89,5	-	-	17,0	17,7 - 16,2	155	255	205	335	335	0,046	110
15	3540	160M	91,0	91,0	90,0	89,0	-	-	23,2	24,3 - 22,3	225	320	260	355	355	0,051	120
18,5	3535	160L	91,7	92,0	91,5	91,0	-	-	27,8	29,1 - 26,7	265	285	220	330	330	0,059	137
22	3555	180M	92,4	93,0	92,0	88,0	-	-	34,0	35,5 - 32,5	305	255	200	305	305	0,071	178
30	3555	200L	93,0	93,5	93,0	90,0	-	-	45,0	47,0 - 43,1	400	220	150	285	285	0,151	276
37	3560	200L	93,6	94,0	93,5	91,0	-	-	54,5	57,0 - 52,2	510	240	150	290	290	0,188	302
45	3565	225M	93,6	93,5	92,0	92,5	-	-	65,2	68,2 - 62,5	620	175	150	310	310	0,297	333
55	3570	250M	94,0	94,0	94,0	91,0	-	-	80,7	84,4 - 77,3	740	175	140	325	325	0,386	456
75	3570	280S	94,1	94,1	93,8	90,0	-	-	111	116 - 107	1000	210	150	260	260	0,600	585
90	3570	280M	95,0	95,0	94,2	90,0	-	-	132	138 - 127	1250	220	150	260	260	0,700	640
110	3570	315S	95,0	95,2	94,5	90,5	-	-	161	168 - 154	1450	150	130	260	260	1,200	870
132	3570	315M	95,4	95,4	94,8	90,5	-	-	192	201 - 184	1700	150	130	260	260	1,300	940
160	3575	315M	95,4	95,2	94,5	90,0	-	-	234	245 - 224	2180	180	130	260	260	1,300	980
200	3575	315L	95,8	95,5	95,0	90,0	-	-	291	304 - 279	2650	180	130	260	260	1,700	1.150
250	3570	315D	95,8	95,4	94,0	88,5	-	-	370	387 - 355	3050	130	120	260	260	2,60	1.600
315	3575	315D	95,8	95,6	94,5	87,5	-	-	472	493 - 452	3750	130	120	260	260	2,90	1.750

Performance data – 60Hz, NEMA Premium

4 Pole

OUTPUT kW	FULL LOAD rpm	FRAME NO.	EFFICIENCY			POWER FACTOR	CURRENT					TORQUE				ROTOR J kg-m2	APPROX. WEIGHT kg
			FULL LOAD (%)	3/4 LOAD (%)	2/4 LOAD (%)	FULL LOAD	FULL LOAD VOLTAGE (A)				LRC (A) 460V	FULL LOAD N•m	LOCKED ROTOR %FLT	PULL UP %FLT	BREAK DOWN %FLT		
							254 - 277 / 440 - 480	265 / 460	460	440 - 480							
0,55	1740	80M	81,0	79,3	75,0	66,5	2,32-2,13 / 1,34-1,23	2,22 / 1,28	-	-	9	3,014	360	320	395	0,002	17,5
0,75	1725	80M	85,5	83,4	80,2	69,0	2,89-2,65 / 1,67-1,53	2,77 / 1,60	-	-	12	4,146	390	360	415	0,003	20,5
1,1	1740	90S	86,5	85,9	83,8	75,5	3,83-3,51 / 2,21-2,03	3,67 / 2,11	-	-	17	6,028	285	220	335	0,005	26,0
1,5	1745	90L	86,5	85,5	82,8	71,0	5,55-5,09 / 3,20-2,94	5,32 / 3,07	-	-	25	8,197	330	255	385	0,006	28,0
2,2	1760	100L	89,5	88,7	87,9	78,0	7,16-6,57 / 4,14-3,79	6,87 / 3,96	-	-	34	11,92	220	180	325	0,011	38,0
3	1760	100L	89,5	88,4	86,3	76,0	-	-	5,54	5,79-5,30	50	16,25	260	255	390	0,013	40,5
4	1755	112M	89,5	89,7	88,6	80,0	-	-	7,01	7,33-6,72	57	21,73	255	200	320	0,021	54,0
5,5	1760	132S	91,7	91,9	91,4	83,5	-	-	9,02	9,43-8,64	78	29,80	290	235	330	0,033	74,5
7,5	1765	132M	91,7	91,8	91,2	83,0	-	-	12,4	12,9-11,9	111	40,52	320	270	495	0,043	85,0
11	1760	160M	92,4	92,0	92,0	84,0	-	-	17,8	18,6-17,0	165	59,60	275	215	305	0,091	133
15	1765	160L	93,0	93,0	93,0	84,0	-	-	24,1	25,2-23,1	225	81,04	295	220	320	0,115	138
18,5	1780	180M	94,0	94,0	93,0	80,5	-	-	30,7	32,1-29,4	265	99,10	220	180	280	0,176	183
22	1780	180L	94,0	94,0	93,0	80,5	-	-	36,5	38,1-35,0	310	117,9	220	175	275	0,197	199
30	1770	200L	94,1	94,0	93,5	86,0	-	-	46,5	48,6-44,6	410	161,6	260	210	325	0,363	266
37	1780	225S	94,7	95,0	94,5	85,0	-	-	57,7	60,3-55,3	510	198,2	255	220	320	0,474	333
45	1780	225M	95,0	95,0	94,5	84,5	-	-	70,4	73,6-67,4	620	241,1	255	215	310	0,495	368
55	1780	250M	95,4	95,0	94,0	87,0	-	-	83,2	87,0-79,7	755	294,6	255	230	315	0,978	492
75	1780	280S	95,4	95,2	94,0	89,0	-	-	111	116-106	1000	402,4	230	190	280	1,600	660
90	1780	280M	95,4	95,2	94,5	89,0	-	-	133	139-127	1200	482,9	230	190	280	1,800	700
110	1785	315S	95,8	95,5	94,5	88,0	-	-	164	171-157	1200	588,5	160	135	260	2,90	930
160	1785	315M	96,2	95,8	95,0	88,0	-	-	237	248-227	2300	856,0	230	200	270	3,00	1.080
200	1785	315L	96,2	95,8	95,0	88,5	-	-	295	308-283	2800	1070	230	200	270	3,80	1.250
250	1785	315D	96,2	95,8	95,0	87,0	-	-	375	392-359	3200	1338	210	180	260	7,30	1.800
315	1785	315D	96,2	96,0	95,5	87,0	-	-	472	494-453	4000	1685	200	180	260	8,50	2.000

Performance data – 60Hz, NEMA Premium

6 Pole

OUTPUT kW	FULL LOAD rpm	FRAME NO.	EFFICIENCY			POWER FACTOR	CURRENT					TORQUE				ROTOR J kg-m2	APPROX. WEIGHT kg
			FULL LOAD (%)	3/4 LOAD (%)	2/4 LOAD (%)	FULL LOAD	FULL LOAD VOLTAGE (A)				LRC (A) 460V	FULL LOAD N•m	LOCKED ROTOR %FLT	PULL UP %FLT	BREAK DOWN %FLT		
							254 - 277 / 440 - 480	265 / 460	460	440 - 480							
0,37	1130	80M	72,5	70,7	65,7	57,5	2,02-1,85 / 1,16-1,07	1,93 / 1,11	-	-	5	3,122	260	245	305	0,002	18,0
0,55	1120	80M	72,5	71,6	67,3	60,5	2,85-2,6 / 1,65-1,51	2,73 / 1,57	-	-	7	4,683	240	225	275	0,003	19,5
0,75	1145	90S	82,5	82,6	80,4	67,0	3,08-2,83 / 1,78-1,63	2,96 / 1,70	-	-	10	6,246	200	195	260	0,005	27,5
3	1170	132S	89,5	89,5	87,9	77,0	-	-	5,46	5,71 - 5,24	41	24,45	185	175	330	0,038	74,0
4	1170	132M	89,5	89,4	88,0	77,0	-	-	7,28	7,62 - 6,98	57	32,60	190	180	345	0,051	84,0
5,5	1175	132M	91,0	89,9	87,7	71,0	-	-	10,7	11,2 - 10,2	87	44,63	225	210	380	0,054	87,0
7,5	1175	160M	91,5	91,5	90,0	75,5	-	-	13,6	14,2 - 13,1	110	60,86	320	265	315	0,121	110
11	1170	160L	91,7	92,0	91,0	75,5	-	-	19,9	20,8 - 19,1	165	89,65	355	300	325	0,157	138
15	1175	180L	92,0	93,0	92,5	80,5	-	-	25,4	26,6 - 24,4	205	121,7	255	195	255	0,334	205
18,5	1180	200L	93,0	93,5	93,0	80,0	-	-	31,2	32,6 - 29,9	270	149,5	250	205	265	0,457	263
22	1180	200L	93,0	94,0	93,5	80,0	-	-	37,1	38,8 - 35,6	320	177,8	245	205	265	0,520	283
30	1180	225M	94,1	94,0	93,5	85,0	-	-	47,1	49,2 - 45,1	340	242,4	230	175	225	0,756	343
37	1185	250M	94,1	94,0	94,0	85,0	-	-	58,1	60,7 - 55,6	500	297,7	250	220	270	1,048	458
45	1185	280S	94,5	94,5	93,2	84,0	-	-	71,2	74,4 - 68,2	650	362,7	220	190	280	1,900	600
55	1185	280M	94,5	94,5	93,5	84,0	-	-	87,0	90,9 - 83,3	720	443,2	220	190	280	2,400	660
75	1185	315S	95,0	94,5	93,5	84,0	-	-	118	123 - 113	910	604,4	220	190	260	3,70	850
90	1185	315M	95,0	95,0	94,2	85,0	-	-	140	146 - 134	1200	725,3	220	200	250	4,20	1.000
110	1185	315M	95,8	95,5	94,8	85,0	-	-	170	177 - 162	1600	886,5	210	180	280	5,10	1.120
132	1185	315L	95,8	95,8	95,2	85,0	-	-	203	213 - 195	1700	1064	220	180	280	5,30	1.200
160	1185	315L	95,8	95,8	95,5	86,0	-	-	244	255 - 234	2000	1289	220	200	280	5,80	1.320
200	1185	315D	95,8	95,8	95,5	88,0	-	-	298	311 - 285	2300	1612	155	125	250	10,90	1.750
250	1185	315D	95,8	95,8	95,5	84,0	-	-	390	408 - 374	3200	2015	200	170	240	11,50	2.100

Dimension

B3, IM1001, Foot Mounted

Output (kW)				FRAME SIZE	FIG. NO.	A	AA	AB	AC	AD	AG	AS	B	B'	BA	BA'	BB	BC	BE	C	H
2P	4P	6P	8P																		
0.75 1.1	0.55 0.75	0.37 0.55	0.18 0.25	80M		125	35	161	156	161	125	67.5	100	--	35.5	35.5	130	18.5	40	50	80
1.5	1.1	0.75	0.37	90S		140	40	180	176	171	125	67.5	100	--	33	33	125	36	40	56	90
2.2	1.5	1.1	0.55	90L		140	40	180	176	171	125	67.5	125	100	33	58	150	36	40	56	90
3 --	2.2 3	1.5 --	0.75 1.1	100L		160	40	200	196	191	147	78.5	140	--	43.5	43.5	176	21	50	63	100
4	4	2.2	1.5	112M		190	50	235	218	198.5	147	78.5	140	--	45.5	45.5	176	28	50	70	112
5.5 7.5	5.5 --	3 --	2.2 --	132S		216	63.5	259	258	216	147	78.5	140	--	59	59	184	6	50	89	132
-- --	7.5 --	4 5.5	3 --	132M		216	63.5	259	258	216	147	78.5	178	140	59	97	222	6	50	89	132
11 15	11 --	7.5 --	4 5.5	160M		254	71	300	317	271	193	91.5	210	--	66	66	256	38	89	108	160
18.5	15	11	7.5	160L		254	71	300	317	271	193	91.5	254	210	66	101	300	38	89	108	160
22	18.5	--	--	180M		279	72	330	354	297	193	91.5	241	-	68.5	68.5	292	34	89	121	180
--	22	15	11	180L		279	72	330	354	297	193	91.5	279	241	68.5	106.5	330	34	89	121	180
30 37	30	18.5 22	15 --	200L		318	88	378	398	330	231	110.5	305	--	90	90	365	53	106	133	200
--	37	--	18.5	225SC		356	94	416	449	356	231	110.5	286	--	90	90	350	30.5	106	149	225
45	--	--	--	225MA		356	94	416	449	356	231	110.5	311	286	90	115	375	30.5	106	149	225
--	45	30	22	225MC		356	84	416	449	356	231	110.5	311	286	90	115	375	30.5	106	149	225
55	--	--	--	250MA		406	112	480	498	398	255	122.5	349	--	105	105	425	45.5	119	168	250
--	55	37	30	250MC		406	112	480	498	398	255	122.5	349	--	105	105	425	45.5	119	168	250

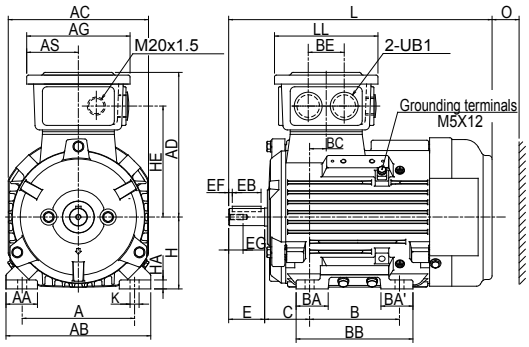

Fig1 F80

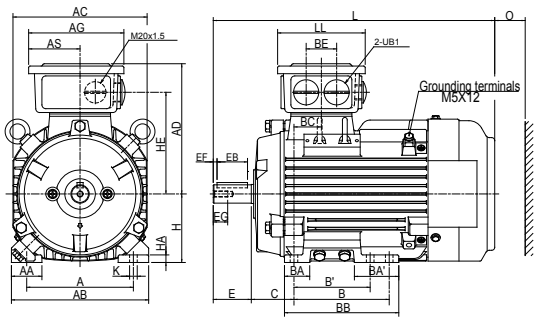

Fig1 F90-112

Note:
1. Dimensions in mm
2. Tolerance of Shaft End Diameter D: Under ψ19 ~ ψ28:j6.
3. Tolerance of shaft center high H: +0, -0.5.
4. Tolerance of N:j6.

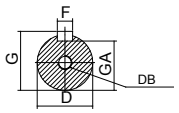

HA	HE	K	L	LL	O	UB	SHAFT EXTENSION									BEARING	
							D	E	EB	EF	EG	F	G	GA	DB	DRIVE END	OPPOSITE DRIVE END
10	123.5	10	293	115	40	M25x1.5	19	40	32	4	16	6	15.5	21.5	M6	6204ZZC3	6204ZZC3
10	133.5	10	344.5	115	40	M25x1.5	24	50	40	5	19	8	20	27	M8	6205ZZC3	6205ZZC3
10	133.5	10	369.5	115	40	M25x1.5	24	50	40	5	19	8	20	27	M8	6205ZZC3	6205ZZC3
12	157	12	392	125	50	M32x1.5	28	60	50	5	22	8	24	31	M10	6306ZZC3	6306ZZC3
13	164.5	12	412.5	125	50	M32x1.5	28	60	50	5	22	8	24	31	M10	6306ZZC3	6306ZZC3
16	182	12	466	125	50	M32x1.5	38	80	70	5	28	10	33	41	M12	6308ZZC3	6306ZZC3
16	182	12	504	125	50	M32x1.5	38	80	70	5	28	10	33	41	M12	6308ZZC3	6306ZZC3
18	215	14.5	608	193	60	M40x1.5	42	110	100	5	36	12	37	45	M16	6309ZZC3	6307ZZC3
18	215	14.5	652	193	60	M40x1.5	42	110	100	5	36	12	37	45	M16	6309ZZC3	6307ZZC3
20	241	14.5	672	193	70	M40x1.5	48	110	100	5	36	14	42.5	51.5	M16	6311C3	6310C3
20	241	14.5	710	193	70	M40x1.5	48	110	100	5	36	14	42.5	51.5	M16	6311C3	6310C3
24	262	18.5	770	231	80	M50x1.5	55	110	100	5	42	16	49	59	M20	6312C3	6212C3
28	288	18.5	816	231	90	M50x1.5	60	140	125	7.5	42	18	53	64	M20	6313C3	6213C3
28	288	18.5	811	231	90	M50x1.5	55	110	100	5	42	16	49	59	M20	6312C3	6212C3
28	288	18.5	841	231	90	M50x1.5	60	140	125	7.5	42	18	53	64	M20	6313C3	6213C3
30	322	24	921	255	105	M63x1.5	60	140	125	7.5	42	18	53	64	M20	6313C3	6313C3
30	322	24	921	255	105	M63x1.5	65	140	125	7.5	42	18	58	69	M20	6315C3	6313C3

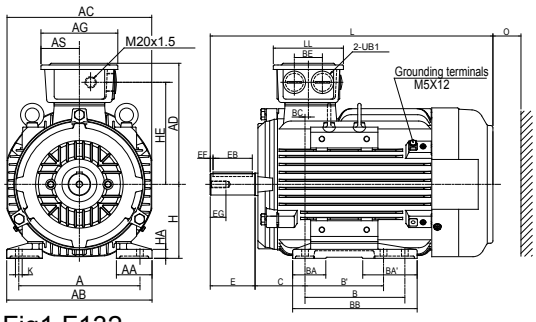

Fig1 F132

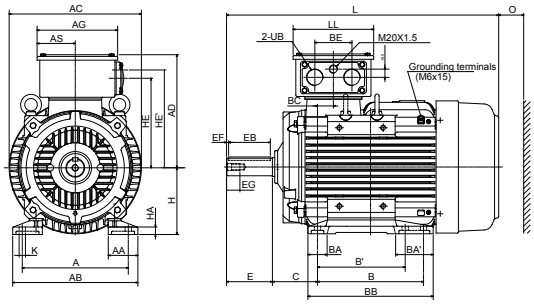

Fig1 F160

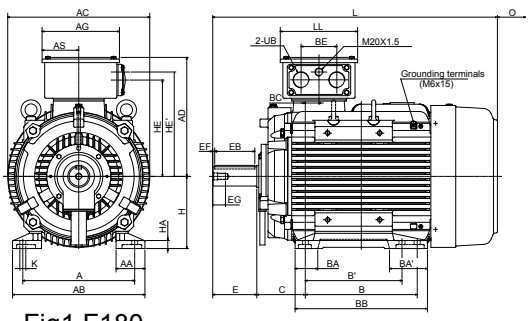

Fig1 F180

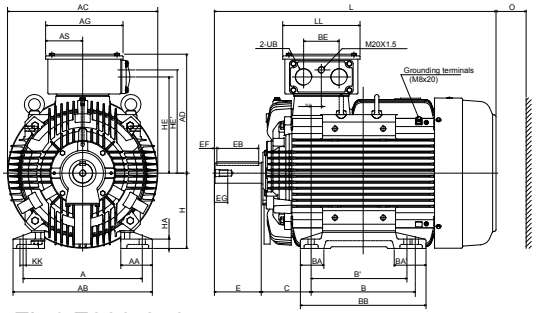

Fig1 F200-250

Dimension

B3, IM1001, Foot Mounted

Output (kW)				FRAME SIZE	FIG. NO.	A	AA	AB	AC	AD	AG	AS	B	B'	BA	BA'	BB	BC	BE	C	H
2P	4P	6P	8P																		
75	-	-	-	280SA		457	110	560	550	446	255	122.5	368	-	130	130	445	48	119	190	280
--	75	45	37	280SB		457	110	560	550	446	255	122.5	368	--	130	130	445	48	119	190	280
--	75	45	37	280SC		457	110	560	550	446	255	122.5	368	--	130	130	445	48	119	190	280
90	--	--	--	280MA		457	110	560	550	446	255	122.5	419	--	130	137	495	48	119	190	280
--	90	55	45	280MB		457	110	560	550	446	255	122.5	419	--	130	137	495	48	119	190	280
--	90	55	45	280MC		457	110	560	550	446	255	122.5	419	--	130	137	495	48	119	190	280
110	--	--	--	315SA		508	115	615	620	527	336	163	406	--	150	150	508	53	140	216	315
--	110	75	55	315SB		508	115	615	620	527	336	163	406	--	150	150	508	53	140	216	315
--	110	75	55	315SC		508	115	615	620	527	336	163	406	--	150	150	508	53	140	216	315
132 160	--	--	--	315MA		508	115	615	620	527	336	163	457	-	213	137	540	53	140	216	315
--	132 160	90 110	75	315MB		508	115	615	620	527	336	163	457	-	213	137	540	53	140	216	315
--	132 160	90 110	75	315MC		508	115	615	620	527	336	163	457	-	213	137	540	53	140	216	315
200	--	--	--	315LA		508	150	650	620	527	336	163	508	--	180	205	730	53	140	216	315
	200	132 160	90 110	315LB		508	150	650	620	527	336	163	508	--	180	205	730	53	140	216	315
	200	132 160	90 110	315LC		508	150	650	620	527	336	163	508	--	180	205	730	53	140	216	315
	--	--	--	315DA		508	150	650	682	590	412	189	630 900	-	255	255	1080	68	180	216	315
	250 315	200 250	132 160 200	315DB		508	150	650	682	590	412	189	630 900	-	255	255	1080	68	180	216	315
--	250 315	200 250	132 160 200	315DC		508	150	650	682	590	412	189	630 900	-	255	255	1080	68	180	216	315

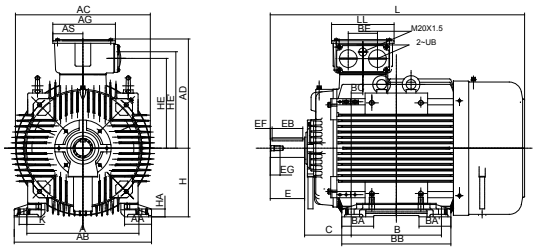

Fig1 F280

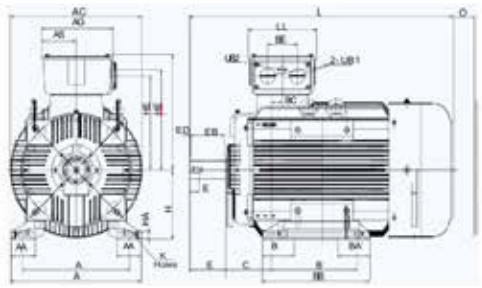

Fig1 F315SM

Note:
1. Dimensions in mm
2. Tolerance of Shaft End Diameter D: Under ψ19 ~ ψ28:j6.
3. Tolerance of shaft center high H: +0, -0.5.
4. Tolerance of N:j6.

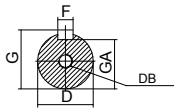

HA	HE	HE'	K	L	LL	O	UB	UB2	SHAFT EXTENSION									BEARING	
									D	E	EB	EF	EG	F	G	GA	DB	DRIVE END	OPPOSITE DRIVE END
32	367	394	24	1037	255	140	M63x1.5	M20x1.5	65	140	125	7.5	40	18	58	69	M20	6316C3	6314C3
32	367	394	24	1037	255	140	M63x1.5	M20x1.5	75	140	125	7.5	40	20	67.5	79.5	M20	6318C3	6316C3
32	367	394	24	1037	255	140	M63x1.5	M20x1.5	75	140	125	7.5	40	20	67.5	79.5	M20	NU318	6316C3
32	367	394	24	1087.5	255	140	M63x1.5	M20x1.5	65	140	125	7.5	40	18	58	69	M20	6316C3	6314C3
32	367	394	24	1087.5	255	140	M63x1.5	M20x1.5	75	140	125	7.5	40	20	67.5	79.5	M20	6318C3	6316C3
32	367	394	24	1087.5	255	140	M63x1.5	M20x1.5	75	140	125	7.5	40	20	67.5	79.5	M20	6318C3	6316C3
35	430	460	28	1216	322	180	M63x1.5	M20x1.5	65	140	125	7.5	42	18	58	69	M20	6316C3	6314C3
35	430	460	28	1246	322	180	M63x1.5	M20x1.5	80	170	160	5	42	22	71	85	M20	6320C3	6316C3
35	430	460	28	1246	322	180	M63x1.5	M20x1.5	80	170	160	5	42	22	71	85	M20	NU320	6316C3
35	430	460	28	1266	322	180	M63x1.5	M20x1.5	65	140	125	7.5	42	18	58	69	M20	6316C3	6314C3
35	430	460	28	1296	322	180	M63x1.5	M20x1.5	80	170	160	5	42	22	71	85	M20	6320C3	6316C3
35	430	460	28	1296	322	180	M63x1.5	M20x1.5	80	170	160	5	42	22	71	85	M20	NU320	6316C3
45	430	460	28	1366	322	180	M63x1.5	M20x1.5	65	140	125	7.5	42	18	58	69	M20	6316C3	6314C3
45	430	460	28	1396	322	180	M63x1.5	M20x1.5	80	170	160	5	42	22	71	85	M20	6320C3	6316C3
45	430	460	28	1396	322	180	M63x1.5	M20x1.5	80	170	160	5	42	22	71	85	M20	NU320	6316C3
45	485	515	28	1674	372	200	M63x1.5	M20x1.5	65	140	125	7.5	42	18	58	69	M20	6316C3	6316C3
45	485	515	28	1704	372	200	M63x1.5	M20x1.5	85	170	160	5	42	22	76	90	M20	6322C3	6322C3
45	485	515	28	1704	372	200	M63x1.5	M20x1.5	95	170	160	5	50	25	86	100	M24	NU322	6322C3

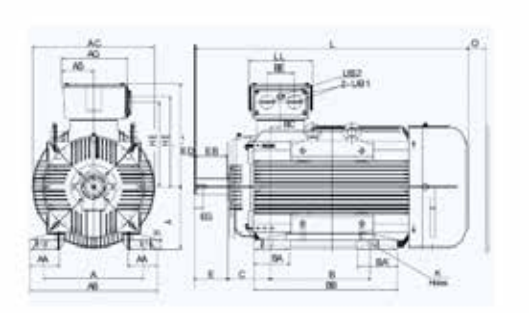

Fig1 F315L

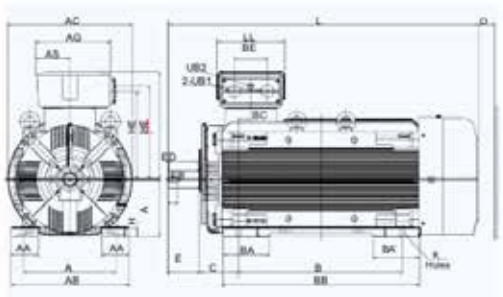

Fig1 F315D

Dimension

B5, IM3001, D Flange Mounted

Output (kW)				FRAME SIZE	FIG. NO.	FLANGE DIMENSION							AC	AD	AG	AS	BE	HE	HE'
2P	4P	6P	8P			LA	LE	M	N	P	S	T							
0.75 1.1	0.55 0.75	0.37 0.55	0.18 0.25	80M		12	40	165	130	200	12	3.5	156	161	125	67.5	40	123.5	
1.5	1.1	0.75	0.37	90S		12	50	165	130	200	12	3.5	176	171	125	67.5	40	133.5	
2.2	1.5	1.1	0.55	90L		12	50	165	130	200	12	3.5	176	171	125	67.5	40	133.5	
3 --	2.2 3	1.5 --	0.75 1.1	100L		16	60	215	180	250	14.5	4	196	191	147	78.5	50	157	
4	4	2.2	1.5	112M		15	60	215	180	250	14.5	4	218	198.5	147	78.5	50	164.5	
5.5 7.5	5.5 --	3 --	2.2 --	132S		16	80	265	230	300	14.5	4	258	216	147	78.5	50	182	
-- --	7.5 --	4 5.5	3 --	132M		16	80	265	230	300	14.5	4	258	216	147	78.5	50	182	
11 15	11	7.5	4 5.5	160M		15	110	300	250	350	18.5	5	317	271	193	91.5	89	215	234.5
18.5	15	11	7.5	160L		15	110	300	250	350	18.5	5	317	271	193	91.5	89	215	234.5
22	18.5	--	--	180M		15	110	300	250	350	18.5	5	354	297	193	91.5	89	241	260.5
--	22	15	11	180L		15	110	300	250	350	18.5	5	354	297	193	91.5	89	241	260.5

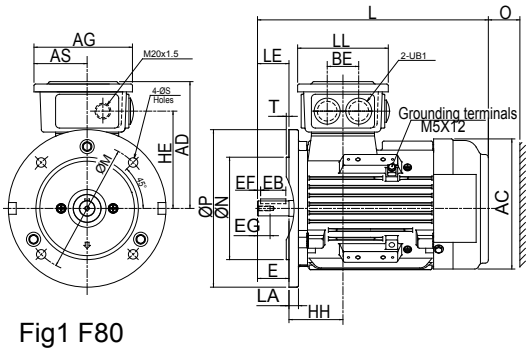

Fig1 F80

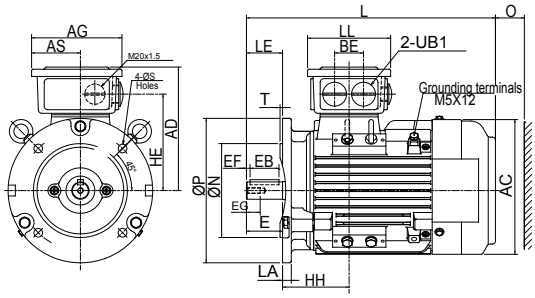

Fig1 F90

Note:
1. Dimensions in mm
2. Tolerance of Shaft End Diameter D: Under ψ19 ~ ψ28:j6.
3. Tolerance of shaft center high H: +0, -0.5.
4. Tolerance of N:j6.

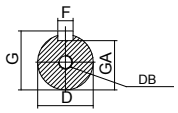

H	L	LL	O	UB	SHAFT EXTENSION									BEARING	
					D	E	EB	EF	EG	F	G	GA	DB	DRIVE END	OPPOSITE DRIVE END
68.5	293	115	40	M25x1.5	19	40	32	4	16	6	15.5	21.5	M6	6204ZZC3	6204ZZC3
92	344.5	115	40	M25x1.5	24	50	40	5	19	8	20	27	M8	6205ZZC3	6205ZZC3
92	369.5	115	40	M25x1.5	24	50	40	5	19	8	20	27	M8	6205ZZC3	6205ZZC3
84	392	125	50	M32x1.5	28	60	50	5	22	8	24	31	M10	6206ZZC3	6206ZZC3
98	412.5	125	50	M32x1.5	28	60	50	5	22	8	24	31	M10	6306ZZC3	6306ZZC3
95	466	125	50	M32x1.5	38	80	70	5	28	10	33	41	M12	6308ZZC3	6306ZZC3
95	504	125	50	M32x1.5	38	80	70	5	28	10	33	41	M12	6308ZZC3	6306ZZC3
146	608	193	60	M40x1.5	42	110	100	5	36	12	37	45	M16	6309ZZC3	6307ZZC3
146	652	193	60	M40x1.5	42	110	100	5	36	12	37	45	M16	6309ZZC3	6307ZZC3
155	672	193	70	M40x1.5	48	110	100	5	36	14	42.5	51.5	M16	6311C3	6310C3
155	710	193	70	M40x1.5	48	110	100	5	36	14	42.5	51.5	M16	6311C3	6310C3

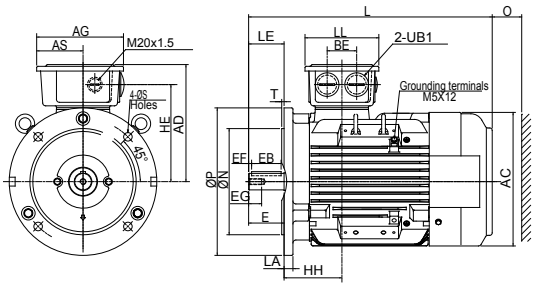

Fig1 F112

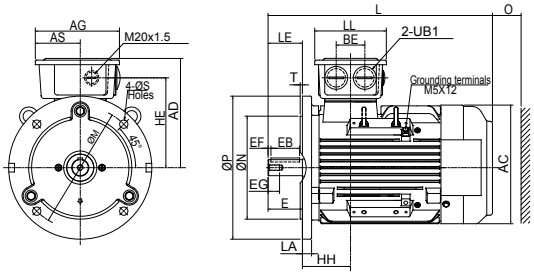

Fig1 F100, 132

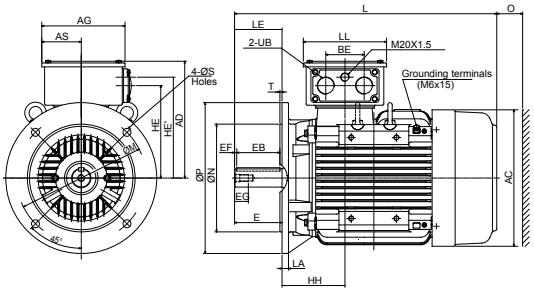

Fig1 F160

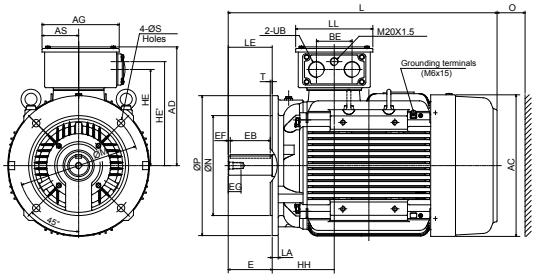

Fig1 F180

Dimension

B5, IM3001, D Flange Mounted

Output (kW)				FRAME SIZE	FIG. NO.	FLANGE DIMENSION							AC	AD	AG	AS	BE	HE	HE'
2P	4P	6P	8P			LA	LE	M	N	P	S	T							
30 37	30	18.5 22	15	200L		17	110	350	300	400	18.5	5	398	330	231	110.5	106	262	289
--	37	--	18.5	225SC		20	140	400	350	450	18.5	5	449	356	231	110.5	106	288	315
45	--	--	--	225MA		20	110	400	350	450	18.5	5	449	356	231	110.5	106	288	315
--	45	30	22	225MC		20	140	400	350	450	18.5	5	449	356	231	110.5	106	288	315
55	--	--	--	250MA		22	140	500	450	550	18.5	5	498	398	255	122.5	119	322	349
--	55	37	30	250MC		22	140	500	450	550	18.5	5	498	398	255	122.5	119	322	349
75	--	--	--	280SA		22	140	500	450	550	18.5	5	550	446	255	122.5	119	367	394
--	75	45	37	280SB		22	140	500	450	550	18.5	5	550	446	255	122.5	119	367	394
--	75	45	37	280SC		22	140	500	450	550	18.5	5	550	446	255	122.5	119	367	394
90	--	--	--	280MA		22	140	500	450	550	18.5	5	550	446	255	122.5	119	367	394
--	90	55	45	280MB		22	140	500	450	550	18.5	5	550	446	255	122.5	119	367	394
--	90	55	45	280MC		22	140	500	450	550	18.5	5	550	446	255	122.5	119	367	394
110	--	--	--	315SA		25	140	600	550	660	24	6	660	527	336	163	140	430	460
--	110	75	55	315SB		25	170	600	550	660	24	6	660	527	336	163	140	430	460
--	110	75	55	315SC		25	170	600	550	660	24	6	660	527	336	163	140	430	460
132 160	--	--	--	315MA		25	140	600	550	660	24	6	660	527	336	163	140	430	460
--	132 160	90 110	75	315MB		25	170	600	550	660	24	6	660	527	336	163	140	430	460
--	132 160	90 110	75	315MC		25	170	600	550	660	24	6	660	527	336	163	140	430	460

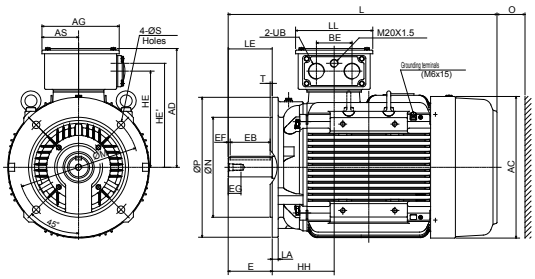

Fig1 F200

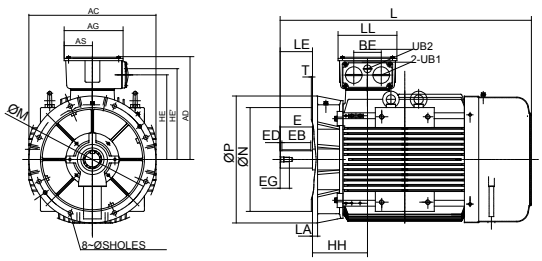

Fig1 F280

Note:
1. Dimensions in mm
2. Tolerance of Shaft End Diameter D: Under ψ19 ~ ψ28:j6.
3. Tolerance of shaft center high H: +0, -0.5.
4. Tolerance of N:j6.

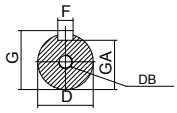

HH	L	LL	O	UB1	UB2	SHAFT EXTENSION									BEARING	
						D	E	EB	EF	EG	F	G	GA	DB	DRIVE END	OPPOSITE DRIVE END
193	770	231	80	M50x1.5		55	110	100	5	42	16	49	59	M20	6312C3	6212C3
179.5	816	231	90	M50x1.5		60	140	125	7.5	42	18	53	64	M20	6313C3	6213C3
179.5	811	231	90	M50x1.5		55	110	100	5	42	16	49	59	M20	6312C3	6212C3
179.5	841	231	90	M50x1.5		60	140	125	7.5	42	18	53	64	M20	6313C3	6213C3
213.5	921	255	105	M63x1.5		60	140	125	7.5	42	18	53	64	M20	6313C3	6313C3
213.5	921	255	105	M63x1.5		65	140	125	7.5	42	18	58	69	M20	6315C3	6313C3
238	1037.5	255	140	M63x1.5	M20x1.5	65	140	125	7.5	42	18	58	69	M20	6316C3	6314C3
238	1037.5	255	140	M63x1.5	M20x1.5	75	140	125	7.5	42	20	67.5	79.5	M20	6318C3	6316C3
238	1037.5	255	140	M63x1.5	M20x1.5	75	140	125	7.5	42	20	67.5	79.5	M20	NU318	6316C3
238	1087.5	255	140	M63x1.5	M20x1.5	65	140	125	7.5	42	18	58	69	M20	6316C3	6314C3
238	1087.5	255	140	M63x1.5	M20x1.5	75	140	125	7.5	42	20	67.5	79.5	M20	6318C3	6316C3
238	1087.5	255	140	M63x1.5	M20x1.5	75	140	125	7.5	42	20	67.5	79.5	M20	NU318	6316C3
269	1216	322	180	M63x1.5		65	140	125	7.5	42	18	58	69	M20	6316C3	6314C3
269	1246	322	180	M63x1.5		80	170	160	5	42	22	71	85	M20	6320C3	6316C3
269	1246	322	180	M63x1.5		80	170	160	5	42	22	71	85	M20	NU320	6316C3
269	1266	322	180	M63x1.5	M20x1.5	65	140	125	7.5	42	18	58	69	M20	6316C3	6314C3
269	1296	322	180	M63x1.5	M20x1.5	80	170	160	5	42	22	71	85	M20	6320C3	6316C3
269	1296	322	180	M63x1.5		80	170	160	5	42	22	71	85	M20	NU320	6316C3

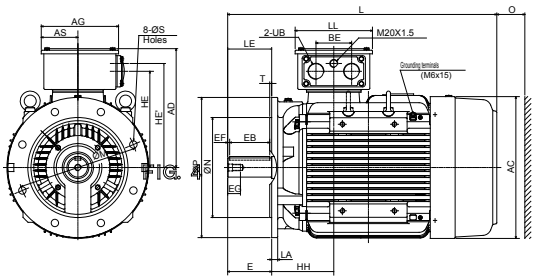

Fig1 225-250

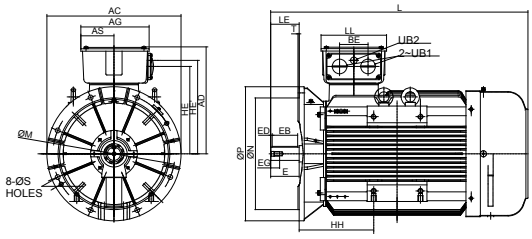

Fig1 F315SM

Dimension

B35, IM2001, Foot and D Flange Mounted

Output (kW)				FRAME SIZE	FIG. NO.	FLANGE DIMENSION							A	AA	AB	AC	AD	AG	AS	B	B'	BA	BA'	BB
2P	4P	6P	8P			LA	LE	M	N	P	S	T												
0.75 1.1	0.55 0.75	0.37 0.55	0.18 0.25	80M		12	40	100	80	120	6	3	125	35	161	156	161	125	67.5	100	--	35.5	35.5	130
1.5	1.1	0.75	0.37	90S		10.33	50	115	95	140	8	3	140	40	180	176	171	125	67.5	100	--	33	33	125
2.2	1.5	1.1	0.55	90L		10.33	50	115	95	140	8	3	140	40	180	176	171	125	67.5	125	100	33	58	150
3 --	2.2 3	1.5 --	0.75 1.1	100L		9.84	60	130	110	160	8	3.5	160	40	200	196	191	147	78.5	140	--	43.5	43.5	176
4	4	2.2	1.5	112M		9.84	60	130	110	160	8	3.5	190	50	235	218	198.5	147	78.5	140	--	45.5	45.5	176
5.5 7.5	5.5 --	3 --	2.2 --	132S		16	80	265	230	300	14.5	4	216	63.5	259	258	216	147	78.5	140	--	59	59	184
--	7.5 --	4 5.5	3 --	132M		16	80	265	230	300	14.5	4	216	63.5	259	258	216	147	78.5	178	140	59	97	222
11 15	11 --	7,5 --	4 5.5	160M		15	110	300	250	350	18.5	5	254	71	300	317	271	193	91.5	210	--	66	66	256
18.5	15	11	7.5	160L		15	110	300	250	350	18.5	5	254	71	300	317	271	193	91.5	254	210	66	110	300
22	18.5	--	--	180M		15	110	300	250	350	18.5	5	279	72	330	354	297	193	91.5	241	--	68.5	68.5	292
--	22	15	11	180L		15	110	300	250	350	18.5	5	279	72	330	354	297	193	91.5	279	241	68.5	106.5	330
30 37	30	18.5 22	15	200L		17	110	350	300	400	18.5	5	318	88	378	398	330	231	110.5	305	--	90	90	365
--	37	--	--	225SC		20	140	400	350	450	18.5	5	356	94	416	449	356	231	110.5	286	--	90	90	350
45	--	--	--	225MA		20	110	400	350	450	18.5	5	356	94	416	449	356	231	110.5	311	286	90	115	375
--	45	30	30	225MC		20	140	400	350	450	18.5	5	356	94	416	449	356	231	110.5	311	286	90	115	375
55	--	--	--	250MA		22	140	500	450	550	18.5	5	406	112	480	498	398	255	122.5	349	--	105	105	425
--	55	37		250MC		22	140	500	450	550	18.5	5	406	112	480	498	398	255	122.5	349	--	105	105	425

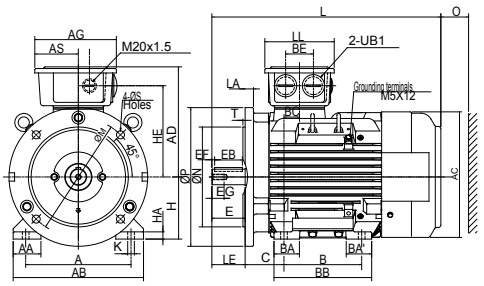

Fig.1 F112

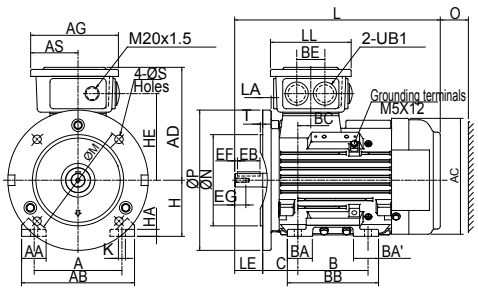

Fig1 F80

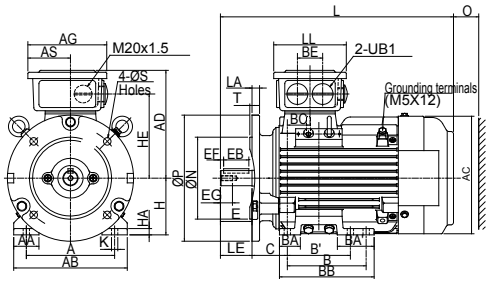

Fig1 F90

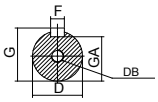

Note:
1. Dimensions in mm
2. Tolerance of Shaft End Diameter D: Under ψ19 ~ ψ28:j6.
3. Tolerance of shaft center high H: +0, -0.5.
4. Tolerance of N:j6.

BC	BE	C	H	HA	HE	HE'	K	L	LL	O	UB	SHAFT EXTENSION									BEARING	
												D	E	EB	EF	EG	F	G	GA	DB	DRIVE END	OPPOSITE DRIVE END
18.5	40	50	80	10	123.5		10	293	115	40	M25x1.5	19	40	32	4	16	6	15.5	21.5	M6	6204ZZC3	6204ZZC3
36	40	56	90	10	133.5		10	344.5	115	40	M25x1.5	24	50	40	5	19	8	20	27	M8	6205ZZC3	6205ZZC3
36	40	56	90	10	133.5		10	369.5	115	40	M25x1.5	24	50	40	5	19	8	20	27	M8	6205ZZC3	6205ZZC3
21	50	63	100	12	157		12	392.	125	50	M32x1.5	28	60	50	5	22	8	24	31	M10	6206ZZC3	6206ZZC3
28	50	70	112	13	164.5		12	412.5	125	50	M32x1.5	28	60	50	5	22	8	24	31	M10	6306ZZC3	6306ZZC3
6	50	89	132	16	182		12	466	125	50	M32x1.5	38	80	70	5	28	10	33	41	M12	6308ZZC3	6306ZZC3
6	50	89	132	16	182		12	504	125	50	M32x1.5	38	80	70	5	28	10	33	41	M12	6308ZZC3	6306ZZC3
38	89	108	160	18	215	234.5	14.5	608	193	60	M40x1.5	42	110	100	5	36	12	37	45	M16	6309ZZC3	6307ZZC3
38	89	108	160	18	215	234.5	14.5	652	193	60	M40x1.5	42	110	100	5	36	12	37	45	M16	6309ZZC3	6307ZZC3
34	89	121	180	20	241	260.5	14.5	672	193	70	M40x1.5	48	110	100	5	36	14	42.5	51.5	M16	6311C3	6310C3
34	89	121	180	20	241	260.5	14.5	710	193	70	M40x1.5	48	110	100	5	36	14	42.5	51.5	M16	6311C3	6310C3
53	106	133	200	24	262	289	18.5	770	231	80	M50x1.5	55	110	100	5	42	16	49	59	M20	6312C3	6212C3
30.5	106	149	225	28	288	315	18.5	816	231	90	M50x1.5	60	140	125	7.5	42	18	53	64	M20	6312C3	6213C3
30.5	106	149	225	28	288	315	18.5	811	231	90	M50x1.5	55	110	100	5	42	16	49	59	M20	6312C3	6212C3
30.5	106	149	225	28	288	315	18.5	841	231	90	M50x1.5	60	140	125	7.5	42	18	53	64	M20	6313C3	6213C3
45.5	119	168	250	30	322	349	24	921	255	105	M63x1.5	60	140	125	7.5	42	18	53	64	M20	6313C3	6313C3
45.5	119	168	250	30	322	349	24	921	255	105	M63x1.5	65	140	125	7.5	42	18	58	69	M20	6315C3	6313C3

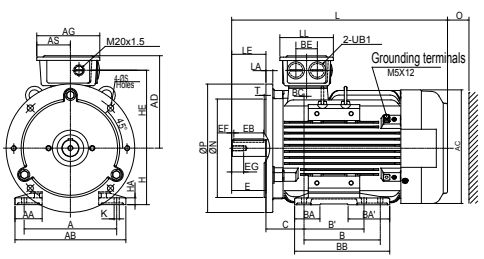

Fig1 F100-132

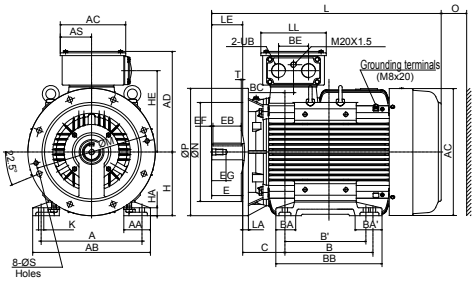

Fig1 F225-250

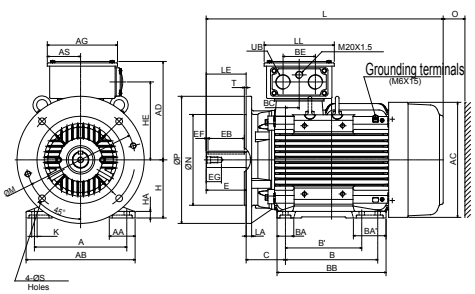

Fig1 F160

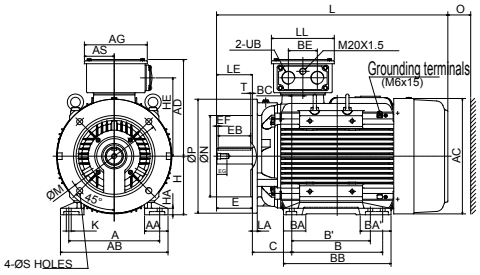

Fig1 F180

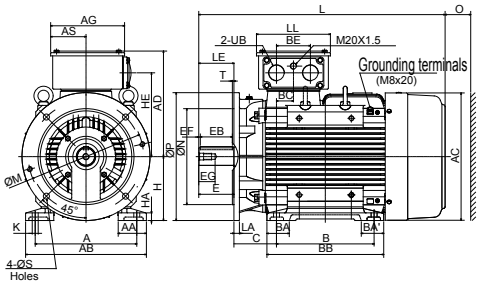

Fig1 F200

Dimension

B35, IM2001, Foot and D Flange Mounted

Output (kW)				FRAME SIZE	FIG. NO.	FLANGE DIMENSION							A	AA	AB	AC	AD	AG	AS	B	B'	BA	BA'	BB
2P	4P	6P	8P			LA	LE	M	N	P	S	T												
75	--	--	--	280SA		22	140	500	450	550	18.5	5	457	110	560	550	446	255	122.5	368	--	130	130	445
--	75	45	37	280SB		22	140	500	450	550	18.5	5	457	110	560	550	446	255	122.5	368	--	130	130	445
--	75	45	37	280SC		22	140	500	450	550	18.5	5	457	110	560	550	446	255	122.5	368	--	130	130	445
90	--	--	--	280MA		22	140	500	450	550	18.5	5	457	110	560	550	446	255	122.5	419	--	130	137	495
--	90	55	45	280MB		22	140	500	450	550	18.5	5	457	110	560	550	446	255	122.5	419	--	130	137	495
--	90	55	45	280MC		22	140	500	450	550	18.5	5	457	110	560	550	446	255	122.5	419	--	130	137	495
110	--	--	--	315SA		25	140	600	550	660	24	6	508	115	615	660	527	336	163	406	--	150	150	508
--	110	75	55	315SB		25	170	600	550	660	24	6	508	115	615	660	527	336	163	406	--	150	150	508
--	110	75	55	315SC		25	170	600	550	660	24	6	508	115	615	660	527	336	163	406	--	150	150	508
132 160	--	--	--	315MA		25	140	600	550	660	24	6	508	115	615	660	527	336	163	457	--	213	137	540
--	132 160	90 110	75	315MB		25	170	600	550	660	24	6	508	115	615	660	527	336	163	457	--	213	137	540
--	132 160	90 110	75	315MC		25	170	600	550	660	24	6	508	115	615	660	527	336	163	457	--	213	137	540
200	--	--	--	315LA		25	140	600	550	660	24	6	508	150	650	660	527	336	163	508	--	180	205	730
--	200	132 160	90 110	315LB		25	170	600	550	660	24	6	508	150	650	660	527	336	163	508	--	180	205	730
--	200	132 160	90 110	315LC		25	170	600	550	660	24	6	508	150	650	660	527	336	163	508	--	180	205	730
250 315	--	--	--	315DA		30	140	600	550	660	24	6	508	150	650	682	590	412	189	630 900	--	255	255	1080
--	250 315	200 250	132 160 200	315DB		30	170	600	550	660	24	6	508	150	650	682	590	412	189	630 900	--	255	255	1080
--	250 315	200 250	132 160 200	315DC		30	170	600	550	660	24	6	508	150	650	682	590	412	189	630 900	--	255	255	1080

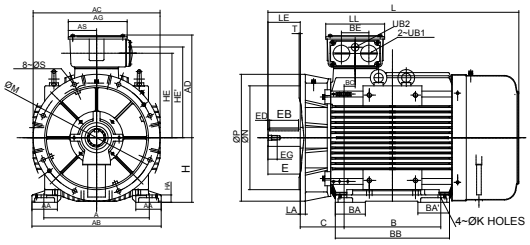

Fig1 F280

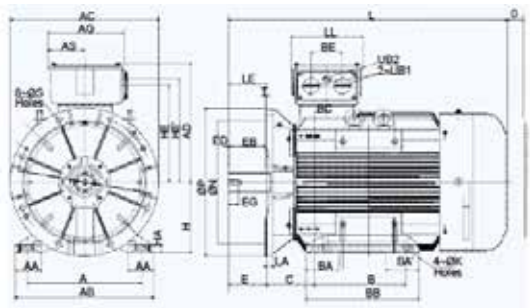

Fig1 F315SM

Note:
1. Dimensions in mm
2. Tolerance of Shaft End Diameter D:m6
3. Tolerance of Key Width F:h9
4. Tolerance of shaft center high H: +0, -1

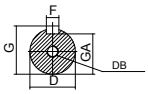

BC	BE	C	H	HA	HE	HE'	K	L	LL	O	UB1	UB2	SHAFT EXTENSION									BEARING	
													D	E	EB	EF	EG	F	G	GA	DB	DRIVE END	OPPOSITE DRIVE END
48	119	190	280	32	367	394	24	1037	255	140	M63x1.5	M20x1.5	65	140	125	7.5	42	18	58	69	M20	6316C3	6314C3
48	119	190	280	32	367	394	24	1037	255	140	M63x1.5	M20x1.5	75	140	125	7.5	42	20	67.5	79.5	M20	6318C3	6316C3
48	119	190	280	32	367	394	24	1037	255	140	M63x1.5	M20x1.5	75	140	125	7.5	42	20	67.5	79.5	M20	NU318	6316C3
48	119	190	280	32	367	394	24		255	140	M63x1.5	M20x1.5	65	140	125	7.5	42	18	58	69	M20	6316C3	6314C3
48	119	190	280	32	367	394	24		255	140	M63x1.5		75	140	125	7.5	42	20	67.5	79.5	M20	6318C3	6316C3
48	119	190	280	32	367	394	24		255	140	M63x1.5	M20x1.5	75	140	125	7.5	42	20	67.5	79.5	M20	NU318	6316C3
53	140	216	315	35	430	460	28	1216	322	180	M63x1.5		65	140	125	7.5	42	18	58	69	M20	6316C3	6314C3
53	140	216	315	35	430	460	28	1246	322	180	M63x1.5		80	170	160	5	42	22	71	85	M20	6320C3	6316C3
53	140	216	315	35	430	460	28	1246	322	180	M63x1.5		80	170	160	5	42	22	71	85	M20	NU320	6316C3
53	140	216	315	35	430	460	28	1266	322	180	M63x1.5		65	140	125	7.5	42	18	58	69	M20	6316C3	6314C3
53	140	216	315	35	430	460	28	1296	322	180	M63x1.5		80	170	160	5	42	22	71	85	M20	6320C3	6316C3
53	140	216	315	35	430	460	28	1296	322	180	M63x1.5		80	170	160	5	42	22	71	85	M20	NU320	6316C3
53	140	216	315	45	430	460	28	1366	322	180	M63x1.5	M20x1.5	65	140	125	7.5	42	18	58	69	M20	6316C3	6314C3
53	140	216	315	45	430	460	28	1396	322	180	M63x1.5	M20x1.5	80	170	160	5	42	22	71	85	M20	6320C3	6316C3
53	140	216	315	45	430	460	28	1396	322	180	M63x1.5	M20x1.5	80	170	160	5	42	22	71	85	M20	NU320	6316C3
68	180	216	315	45	485	515	28	1674	372	200	M63x1.5	M20x1.5	65	140	125	7.5	42	18	58	69	M20	6316C3	6316C3
68	180	216	315	45	485	515	28	1704	372	200	M63x1.5	M20x1.5	85	170	160	5	42	22	76	90	M20	6322C3	6322C3
68	180	216	315	45	485	515	28	1704	372	200	M63x1.5	M20x1.5	95	170	160	5	50	25	86	100	M24	NU322	6322C3

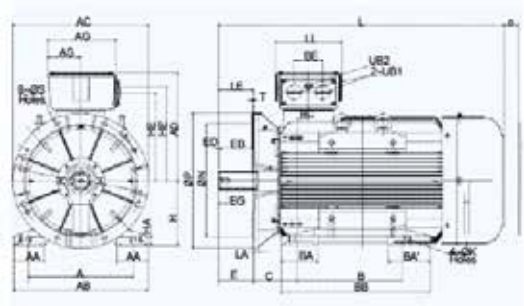

Fig1 F315L

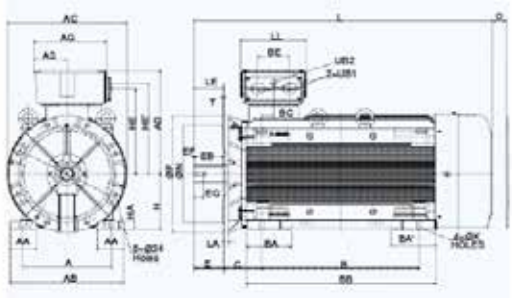

Fig1 F315D

Dimension

B14, IM3601, C Face Mounted

Output (kW)				FRAME SIZE	FIG. NO.	FLANGE DIMENSION						AC	AD	AG	AS	BE	HE	HE'
2P	4P	6P	8P			LE	M	N	P	S	T							
0.75 1.1	0.55 0.75	0.37 0.55	0.18 0.25	80M		40	100	80	120	M6	3	156	161	125	67.5	40	123.5	
1.5	1.1	0.75	0.37	90S		50	115	95	140	M8	3	176	171	125	67.5	40	133.5	
2.2	1.5	1.1	0.55	90L		50	115	95	140	M8	3	176	171	125	67.5	40	133.5	
3 --	2.2 3	1.5 --	0.75 1.1	100L		60	130	110	160	M8	3.5	196	191	147	78.5	50	157	
4	4	2.2	1.5	112M		60	130	110	160	M8	3.5	218	198.5	147	78.5	50	164.5	
5.5 7.5	5.5 -	3 -	2.2 -	132S		80	165	130	200	M10	3.5	258	216	147	78.5	50	182	
-- --	7.5 --	4 5.5	3 --	132M		80	165	130	200	M10	3.5	258	216	147	78.5	50	182	
11 15	11	7.5	4 5.5	160M		110	215	180	250	M12	4	317	271	193	91.5	89	215	234.5
18.5	15	11	7.5	160L		110	215	180	250	M12	4	317	271	193	91.5	89	215	234.5

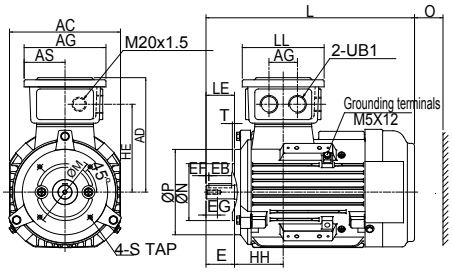

Fig1 F80

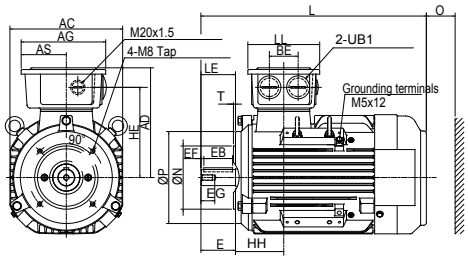

Fig1 F90-112

B34, IM2101, Foot and C face Mounted

Output (kW)				FRAME SIZE	FIG. NO.	FLANGE DIMENSION						A	AA	AB	AC	AD	AG	AS	B	B'	BA	BA'	BB
2P	4P	6P	8P			LE	M	N	P	S	T												
0.75 1.1	0.55 0.75	0.37 0.55	0.18 0.25	80M		40	100	80	120	M6	3	125	35	161	156	161	125	67.5	100	--	35.5	35.5	130
1.5	1.1	0.75	0.37	90S		50	115	95	140	M8	3	140	40	180	176	171	125	67.5	100	--	33	33	125
2.2	1.5	1.1	0.55	90L		50	115	95	140	M8	3	140	40	180	176	171	125	67.5	125	100	33	58	150
3 --	2.2 3	1.5 --	0.75 1.1	100L		60	130	110	160	M8	3.5	160	40	200	196	191	147	78.5	140	--	43.5	43.5	176
4	4	2.2	1.5	112M		60	130	110	160	M8	3.5	190	50	235	218	198.5	147	78.5	140	--	43.5	43.5	176
5.5 7.5	5.5 -	3 -	2.2 -	132S		80	165	130	200	M10	3.5	216	63.5	259	258	216	147	78.5	140	--	59	59	184
-- --	7.5 --	4 5.5	3 --	132M		80	165	130	200	M10	3.5	216	63.5	259	258	216	147	78.5	178	140	59	97	222
11 15	11	7.5	4 5.5	160M		110	215	180	250	M12	4	254	71	300	317	271	193	91.5	210	--	66	66	256
18.5	15	11	7.5	160L		110	215	180	250	M12	4	254	71	300	317	271	193	91.5	254	210	66	110	300

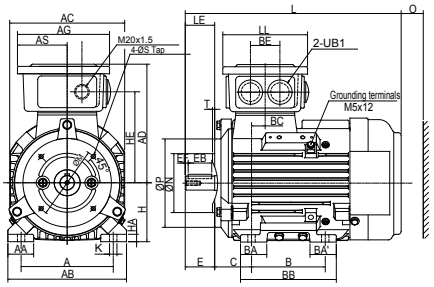

Fig1 F80

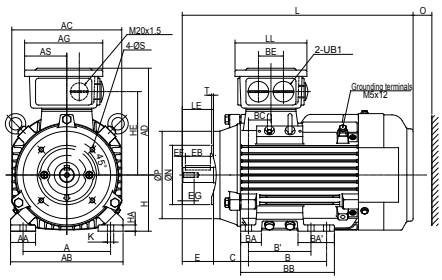

Fig1 F90-112

HH	L	LL	O	UB1	UB2	SHAFT EXTENSION									BEARING	
						D	E	EB	EF	EG	F	G	GA	DB	DRIVE END	OPPOSITE DRIVE END
68.5	293	115	40	M25x1.5		19	40	32	4	16	6	15.5	21.5	M6	6204ZZC3	6204ZZC3
92	344.5	115	40	M25x1.5		24	50	40	5	19	8	20	27	M8	6205ZZC3	6205ZZC3
92	369.5	115	40	M25x1.5		24	50	40	5	19	8	20	27	M8	6205ZZC3	6205ZZC3
84	392	125	50	M32x1.5		28	60	50	5	22	8	24	31	M10	6206ZZC3	6206ZZC3
98	412.5	125	50	M32x1.5		28	60	50	5	22	8	24	31	M10	6306ZZC3	6306ZZC3
95	466	125	50	M32x1.5		38	80	70	5	28	10	33	41	M12	6308ZZC3	6306ZZC3
95	504	125	50	M32x1.5		38	80	70	5	28	10	33	41	M12	6308ZZC3	6306ZZC3
146	608	193	60	M40x1.5	M20x1.5	42	110	100	5	36	12	37	45	M16	6309ZZC3	6307ZZC3
146	652	193	60	M40x1.5	M20x1.5	42	110	100	5	36	12	37	45	M16	6309ZZC3	6307ZZC3

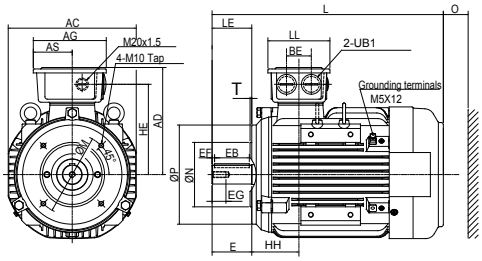

Fig1 F132

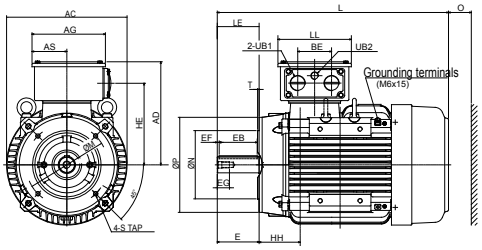

Fig1 F160

BC	BE	C	H		HE	HE'	K	L	LL	O	UB1	UB2	SHAFT EXTENSION									BEARING	
													D	E	EB	EF		F	G	GA	DB	DRIVE END	OPPOSITE DRIVE END
18.5	40	50	80	10	123.5		10	293	115	40	M25x1.5		19	40	32	4	16	6	15.5	21.5	M6	6204ZZC3	6204ZZC3
36	40	56	90	10	133.5		10		115	40	M25x1.5		24	50	40	5	19	8	20	27	M8	6205ZZC3	6205ZZC3
36	40	56	90	10	133.5		10		115	40	M25x1.5		24	50	40	5	19	8	20	27	M8	6205ZZC3	6205ZZC3
21	50	63	100	12	157		12		125	50	M32x1.5		28	60	50	5	22	8	24	31	M10	6206ZZC3	6206ZZC3
28	50	70	112	13	164.5		12		125	50	M32x1.5		28	60	50	5	22	8	24	31	M10	6306ZZC3	6306ZZC3
6	50	89	132	16	182		12	466	125	50	M32x1.5		38	80	70	5	28	10	33	41	M12	6308ZZC3	6306ZZC3
6	50	89	132	16	182		12	504	125	50	M32x1.5		38	80	70	5	28	10	33	41	M12	6308ZZC3	6306ZZC3
38	89		160	18	215	234.5		608	193	60	M40x1.5	M20x1.5	42	110	100	5	36	12	37	45	M16	6309ZZC3	6307ZZC3
38	89		160	18	215	234.5		652	193	60	M40x1.5	M20x1.5	42	110	100	5	36	12	37	45	M16	6309ZZC	6307ZZC3

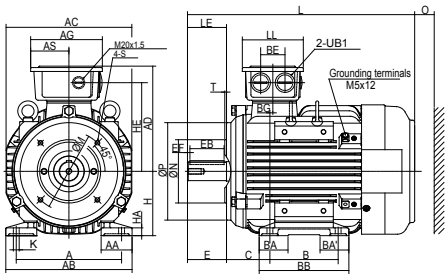

Fig1 F132

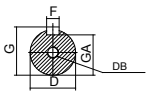

Note:
1.Dimensions in mm
2.Tolerance of Shaft End Diameter D: Under ψ19 ~ ψ28:j6.
3.Tolerance of shaft center high H: +0, -0.5.
4.Tolerance of N:j6.

Radial Bearing Load 50HZ

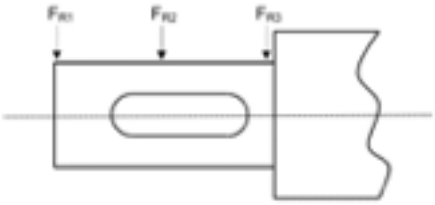

Load FR [N] for standard ball bearings										Load FR [N] for cylinder roller bearings					
Frame Size	Poles	Max Fr1	Max Fr2	Max Fr3	Frame Size	Poles	Max Fr1	Max Fr2	Max Fr3	Frame Size	Poles	Max Fr1	Max Fr2	Max Fr3	Max FR3 min
80	2	558	620	682	200	2	3434	3793	4152	160	2	5650	6325	7000	604
	4	699	777	855		4	4368	4825	5282		4	8000	8500	9000	539
	6	790	870	950		6	4965	5485	6004		6	8900	9550	10200	517
	8	927	1017	1051		8	5733	6278	6484		8	8684	9763	10185	505
90	2	583	659	736	225	2	4010	4401	4792	180	2	6450	7219	7888	923
	4	741	838	936		4	4731	5346	5962		4	8560	9255	9950	806
	6	849	961	1073		6	5436	6112	6788		6	9600	10450	11300	777
	8	1039	1142	1179		8	6367	7073	7345		8	11207	12364	12805	747
100	2	830	932	1034	250	2	4902	5441	5981	200	2	7350	8119	8888	1108
	4	1039	1168	1296		4	6026	6685	7343		4	9075	10024	10973	960
	6	1186	1333	1479		6	7130	7909	8688		6	10203	11271	12338	911
	8	1358	1505	1562		8	8083	8890	9196		8	12385	13563	14008	886
112	2	1157	1293	1429	280	2	5231	5685	6224	225	2	8233	9036	9839	1316
	4	15465	1637	1809		4	7482	8255	9210		4	9503	10739	11976	1131
	6	1699	1898	2098		6	8353	9210	10275		6	10817	12161	13506	1069
	8	2039	2248	2327		8	10234	11124	11455		8	14699	16398	17055	1038
132	2	1734	1970	2207	315S-M-L	2	5208	5514	5871	250	2	11585	12860	14135	1807
	4	2185	2482	2780		4	8895	9786	10894		4	14149	15695	17240	1525
	6	2530	2834	3139		6	10230	11275	12548		6	16194	17963	19732	1431
	8	2847	3194	3330		8	11398	12378	12744		8	20313	22341	23111	1384
160	2	2198	2507	2816	315D	2	4188	4405	4647	280	2	---	---	---	---
	4	2740	3125	3511	315D (D85)	4	10780	11456	12210		4	17635	19451	21692	2241
	6	3143	3541	3938		6	12691	13514	14396		6	19671	21705	24216	2082
	8	3593	4011	4168		8	12085	12842	13116		8	26617	29085	30013	1996
180	2	3141	3529	3917						315S-M-L	2	---	---	---	---
	4	3835	4316	4796							4	22106	24348	27100	2910
	6	4398	4902	5405							6	24996	27531	30640	2679
	8	5051	5573	5772							8	33259	35856	36814	2581
										315D	2	---	---	---	---
										315D	4	25347	27116	29115	3816
											(D85)	26538	28184	30066	3462
											8	39771	42264	43166	3216
										315D (D95)	4	29204	31007	33124	3816
											6	32722	34750	37102	3462
											8	41375	43969	44907	3216

Radial Bearing Load 60HZ

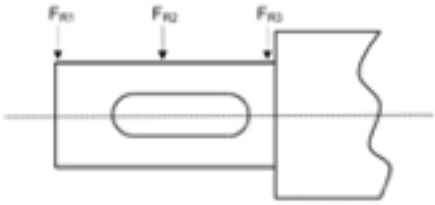

Load FR [N] for standard ball bearings										Load FR [N] for cylinder roller bearings					
Frame Size	Poles	Max Fr1	Max Fr2	Max Fr3	Frame Size	Poles	Max Fr1	Max Fr2	Max Fr3	Frame Size	Poles	Max Fr1	Max Fr2	Max Fr3	Max FR3 min
80	2	522	580	638	200	2	3199	3534	3868	160	2	5311	5946	6580	631
	4	654	727	800		4	4072	4498	4924		4	7520	7990	8460	552
	6	700	800	900		6	4626	5110	5594		6	8360	8974	9588	517
	8	868	953	984		8	5352	5861	6053		8	8152	9165	9561	511
90	2	545	614	683	225	2	3739	4104	4468	180	2	5934	6596	7257	969
	4	693	782	871		4	4474	5030	5586		4	7875	9154	9154	829
	6	795	895	996		6	5063	5692	6322		6	8832	10396	10396	782
	8	974	1069	1103		8	5943	6602	6856		8	10515	11601	12015	758
100	2	775	871	966	250	2	4573	5076	5579	200	2	6930	7655	8379	1167
	4	971	1091	1210		4	5609	6221	6834		4	8557	9452	10347	989
	6	1107	1244	1381		6	6652	7378	8105		6	9619	10625	11631	930
	8	1270	1407	1460		8	7550	8304	8590		8	11612	12717	13134	901
112	2	1082	1209	1335	280	2	5164	5615	6154	225	2	7764	8521	9278	1391
	4	1370	1531	1691		4	7399	8036	8810		4	8958	10124	11290	1168
	6	1590	1777	1963		6	8340	9065	9927		6	10193	11460	12728	1094
	8	1909	2104	2178		8	9603	10437	10749		8	13790	15384	16000	1057
132	2	1623	1844	2065	315S-M-L	2	4958	5282	5654	250	2	10932	12136	13339	1920
	4	2045	2303	2561		4	8663	9310	10143		4	13340	14797	16254	1581
	6	2359	2655	2952		6	9672	10437	11319		6	15280	16950	18619	1468
	8	2670	2996	3123		8	10019	10801	11090		8	19060	20962	21684	1412
160	2	2055	2318	2581	315D	2	4390	4615	4870	280	2	---	---	---	---
	4	2560	2888	3217	315D (D85)	4	10094	10740	11456		4	17375	18855	20678	2336
	6	2931	3301	3672		6	11622	12328	13181		6	19472	21177	23177	2145
	8	3361	3744	3891		8	11144	11842	12095		8	25118	27447	28322	2038
180	2	2940	3303	3666						315S-M-L	2	---	---	---	---
	4	3585	4016	4447							4	21863	23569	25538	3044
	6	4104	4574	5044							6	24392	26273	28508	2773
	8	4723	5211	5397							8	31254	33694	24594	2645
										315D	2	---	---	---	---
										315D	4	22824	24509	26401	4028
											(D85)	23706	25587	27734	3604
											8	37315	39654	40500	3300
										315D (D95)	4	26695	28371	30262	4028
											6	30164	32026	34202	3604
											8	38918	41358	42240	3300

Standard & Regulations

TITLE	INTERNATIONAL IEC	EUROPE EN/ DIRECTIVE	GERMANY DIN/ VDE
Rotating electrical machines – Part 1: Rating and performance	60 034-1	60 034-1	DIN EN 60 034-1 VDE 0530 Part 1
Rotating electrical machines – Part 2-1: Standard methods for determining losses and efficiency from tests	60 034-2-1: 2007	60 034-2-1: 2007	DIN EN 60 034-2 VDE 0530 Part 2
Rotating electrical machines – Part 5: Degrees of protection provided by the integral design of rotating electrical machines (IP code) – Classification	60 034-5	60 034-5	DIN EN 60 034-5 VDE 0530 Part 5
Rotating electrical machines – Part 6: Methods of cooling (IC Code)	60 034-6	60 034-6	DIN EN 60 034-6 VDE 0530 Part 6
Rotating electrical machines – Part 7: Classification of types of construction, mounting arrangements and terminal box position (IM Code)	60 034-7	60 034-7	DIN EN 60 034-7 VDE 0530 Part 7
Rotating electrical machines – Part 8: Terminal markings and direction of rotation	60 034-8	60 034-8	DIN EN 60 034-8 VDE 0530 Part 8
Rotating electrical machines – Part 9: Noise limits	60 034-9	60 034-9	DIN EN 60 034-9 VDE 0530 Part 9
Rotating electrical machines – Part 11: Thermal protection	60 034-11	60 034-11	
Thermistors, PTC			DIN 44081:1980-6
Rotating electrical machines – Part 12: Starting performance of single-speed three-phase cage induction motors	60 034-12	60 034-12	DIN EN 60 034-12 VDE 0530 Part 12
Rotating electrical machines – Part 14: Mechanical vibration of certain machines with shaft heights 56 mm and higher – Measurement, evaluation and limits of vibration severity	60 034-14	60 034-14	DIN EN 60 034-14 VDE 0530 Part 14
Rotating electrical machines – Part 17: 3)			
Cage induction motors when fed from converters-Application guide	TS 60034-17		
Mechanical vibration; balancing shaft and fitment key convention			DIN ISO 8821
Mechanical vibration – Balance quality requirements for rotors in a constant (rigid) state – Part 1: Specification and verification of balance tolerances			DIN ISO 1940-1: 2004-04
Rotating electrical machines – Part 30: Efficiency classes of single-speed, three-phase, cage-induction motors (IE-code)	60 034-30		
IEC standard voltages Dimensions and output series for rotating electrical machines – Part 1:	60 038	—	DIN IEC 60 038
Frame numbers 56 to 400 and flange numbers 55 to 1080	60 072-1 1)	50 347	DIN EN 50 347 2)
Electrical insulation – Thermal evaluation and designation	60 085	—	DIN IEC 60 085
Safety of electrical Machines – Electrical equipment of Machines Part 1: Common Requirements Electro technical graphical symbols	60 204-1 60 617-2	60 204-1 60 617-2	DIN EN 60 204-1 VDE 0113-1 DIN EN 60 617-2
Drive Type Fastenings without Taper Action; Parallel Keys, Keyways, Deep Pattern			DIN 6885-1
Hexagonal screws			DIN EN ISO 4014
Hexagonal nuts			DIN EN ISO 4032
Lubricating nipples; button head			DIN 3404
Protection of steel structures from corrosion by organic and metallic coatings			DIN 55 928
Low Voltage Directive		2014/35/EU	
EMC Directive		2014/30/EU	
Commission Regulation (EC)		640/2009	
WEEE Directive		2012/19/EU	

Specification requirements

I. BASIC REQUIREMENT	
OUTPUT	_____HP_____KW
POLE	☐ 2P ☐ 4P ☐ 6P ☐ 8P ☐ OTHER P
FREQUENCY	☐ 50Hz ☐ 60Hz ☐ OTHER Hz
VOLTAGE	_____ VOLTS
STANDARD	☐ IEC ☐ NEMA ☐ GB ☐ TECO STD ☐ OTHER
EFFICIENCY	☐ IE1 ☐ IE2 ☐ IE3 ☐ GB3 ☐ GB2 ☐ GB1 ☐ MEPS ☐ NEMA-PREMIUM ☐ OTHER
INSULATION	☐ F ☐ H ☐ OTHER
TEMP. RISE	☐ B(80K) ☐ F(105K) ☐ OTHER
S.F.	☐ 1.0 ☐ 1.1 ☐ 1.15 ☐ OTHER
ENCLOSURE & PROTECTION	IP _____ ☐ TEFC ☐ ODP ☐ OTHER
MOUNTING TYPE	☐ HORIZONTAL ☐ VERTICAL ☐ FOOT ☐ FLANGE ☐ OTHER
COOLING METHOD	☐ IC410 ☐ IC411 ☐ IC416 ☐ IC01 ☐ OTHER
STARTING METHOD	☐ DOL ☐ VFD ☐ STAR-DELTA
DRIVE METHOD	☐ DIRECT ☐ BELT ☐ OTHER
II. ENVIRONMENT REQUIREMENT	
ENVIRONMENT	☐ INDOOR ☐ OUTDOOR ☐ COVER ☐ CORROSION
AMBIENT TEMP.	☐ STD (-15oC~40oC) ☐ OTHER
ALTITUDE	☐ 1000m↓ ☐ OTHER
HUMIDITY	☐ 90%RH↓ ☐ OTHER
LOAD	☐ FAN(BLOWER) ☐ PUMP ☐ COMPRESSOR ☐ OTHER
III. OTHER REQUIREMENT	

MOTOVARIO S.p.A.
Via Quattro Passi 1/3
41043 Formigine (MO)
Italy

MOTOVARIO GMBH
Pfützenstr. 75
64347 Griesheim
Germany

MOTOVARIO LTD
Rushock Trading Estate
WR9 0NR Droitwich,
Worcestershire
United Kingdom

MOTOVARIO SAS
42, Rue de l'Avenir
69740 Genas
France

MOTOVARIO, S.A.U.
Pol. Industrial Camí del Plà
C/Costa del Plà, n.3
08297 Castellgalí
Spain

TECO distributed by MOTOVARIO® HEART OF MOTION a TECO Group company